interatletika™

PRODUCTION AND SALE OF SPORTS GOODS
Customer support:
+38 095 273 81 53
play.interatletika.com

DATA SHEET

Gymnastic complex
«Sport-1» ***SE 760.1***

The product complies with EN 1176-1:2009 requirements

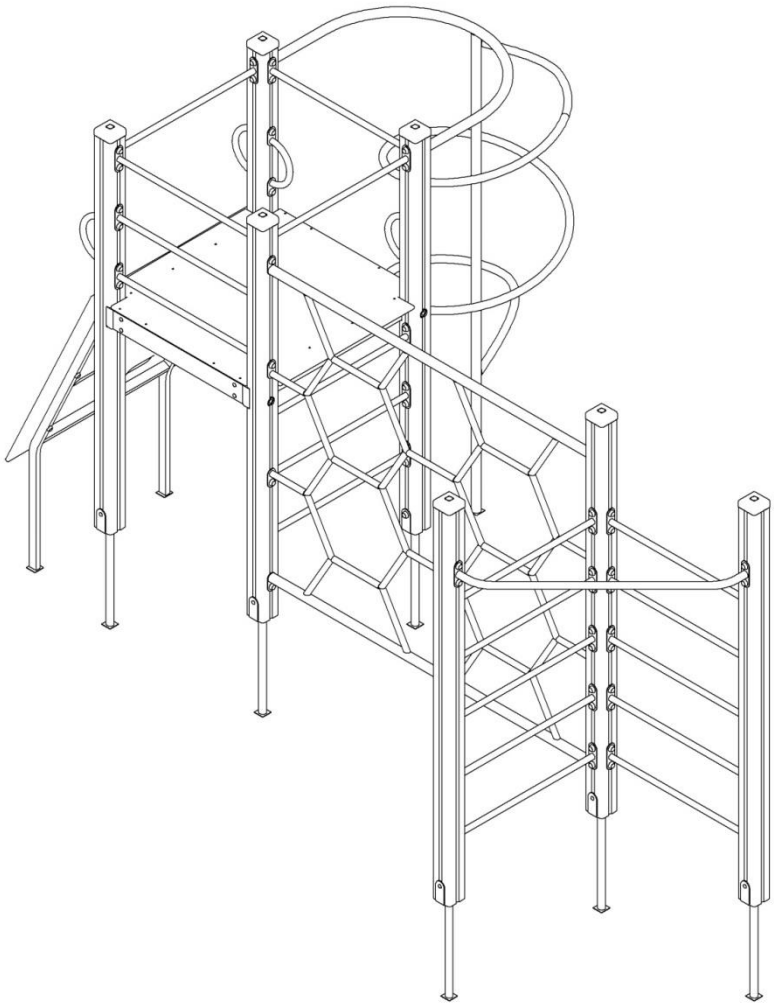

CONTENT

№	Chapter	Page
1	General information	3
2	Main technical data and characteristics	3
3	Completeness and characteristics of the main parts of the product	3
4	Product assembly and installation procedure	3
5	Product installation scheme	4
6	Information on storage, transportation and disposal	4
7	Product use	4
8	Product maintenance	5

FOR NOTES

1. GENERAL INFORMATION

Purpose and content of this document. This document contains a general description of the equipment, information on installation, intended use, maintenance, current repair and manufacturer's warranty.

Distribution of this document for product modifications. The manufacturer can make changes to the design of the product, aimed at improving its characteristics, changing the design, etc. This document may not contain a description of such changes, but applies to such modified products.

2. MAIN TECHNICAL DATA AND CHARACTERISTICS

Length, mm	**4420**
Width, mm	**3076**
Height, mm	**2094**
Weight, kg	**224**
Height of fall, mm	**1859**
Age range, years	**Up to 12**
Weight limits, kg	**Up to 60**

3. COMPLETENESS AND CHARACTERISTICS OF THE MAIN PARTS OF THE PRODUCT

The Sport-1 gymnastic complex consists of various play elements, such as a shield with a basketball hoop, ascent, horizontal bars, and more. The product is delivered unassembled and is intended for sports and play. The names of the main components of the product are listed in the Appendixy.

4. PRODUCT ASSEMBLY AND INSTALLATION PROCEDURE

Tools and accessories. The product does not include the tools required for assembly and installation.

Product installation procedure.

1) Mark out the area as shown on the foundation layout scheme with racks.
2) Dig holes in the ground for installing the racks, maintaining the required dimensions.
3) Pull the thread along the prepared recesses, mark zero (coating level, or if there is no coating, then the ground level). Level the depth of the recesses in advance using supports.

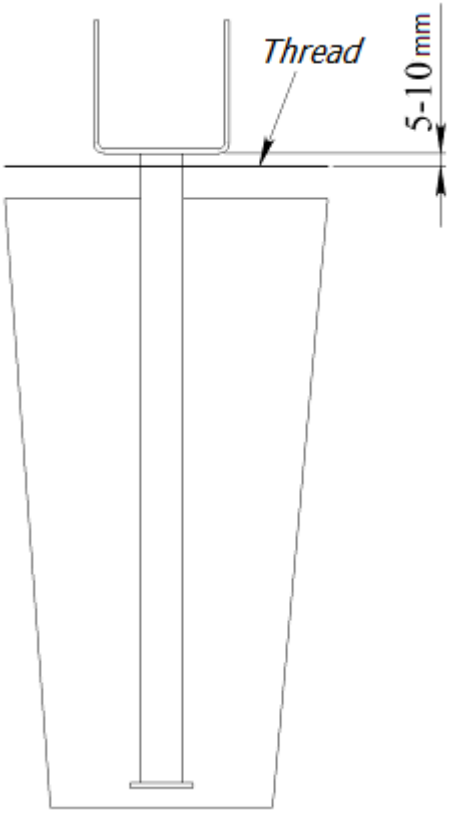

Pic.1

4) Using M8x120 GOST7802 bolts, M8 GOST 5915 nuts, 10 GOST 11371 washers, caps and M8 cups assemble the beams with supports as shown in picture:

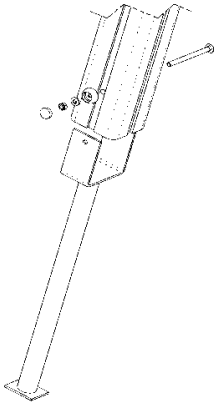

Pic.2

5) Assembly site with beams by installing it in the grooves of the beams. Standard products are additionally fastened with cups and caps M8.

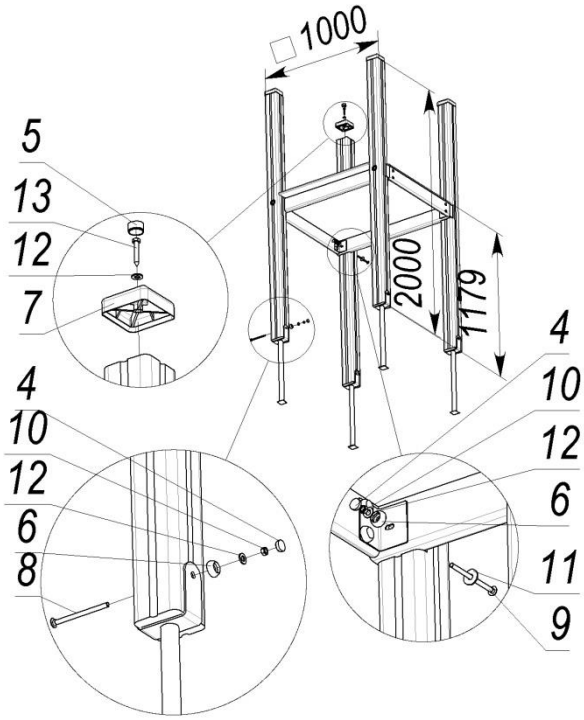

Pos.	Name	Weight, kg	Q-ty
1	Site	19	1
2	Beam support	2	4
3	Beam	11	4
4	Cap M8		8
5	Cap		4
6	Cup M8		8
7	Cap		4
8	Bolt M8x120 GOST7802		4
9	Bolt M8x130 GOST7802		4
10	Nut M8 GOST5915		8
11	Washer 10 GOST6958		4
12	Washer 10 GOST11371		12
13	Screw 8x50 GOST11473		4

Pic.3

6) Grate assembly set:

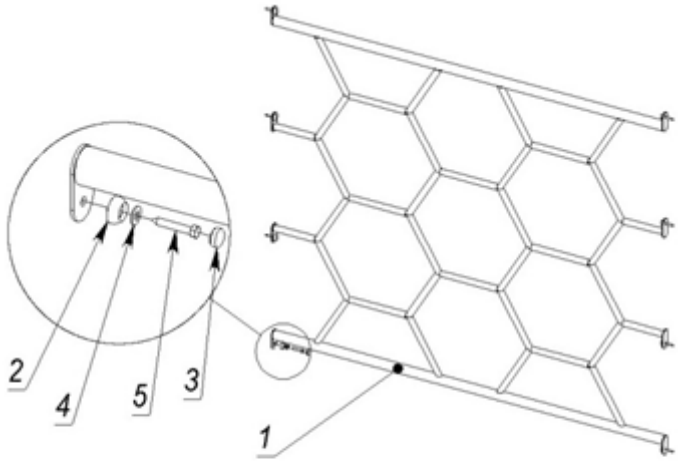

Pos.	Name	Weight, kg	Q-ty	Note
1	Grate	1	26	
2	Cup M8	8		Brown
3	Cap M8	8		Brown
4	Washer 10 GOST11371	8		
5	Screw 8x50 GOST11473	8		

Pic.4

7) Install the assembled site and attach the mesh between the installed beams (according to the foundation layout scheme) as shown in the picture below (standard products are additionally fastened with plastic caps and M8 cups). Place the crossbars between the beams according to the geometric dimensions specified in the Appendix.

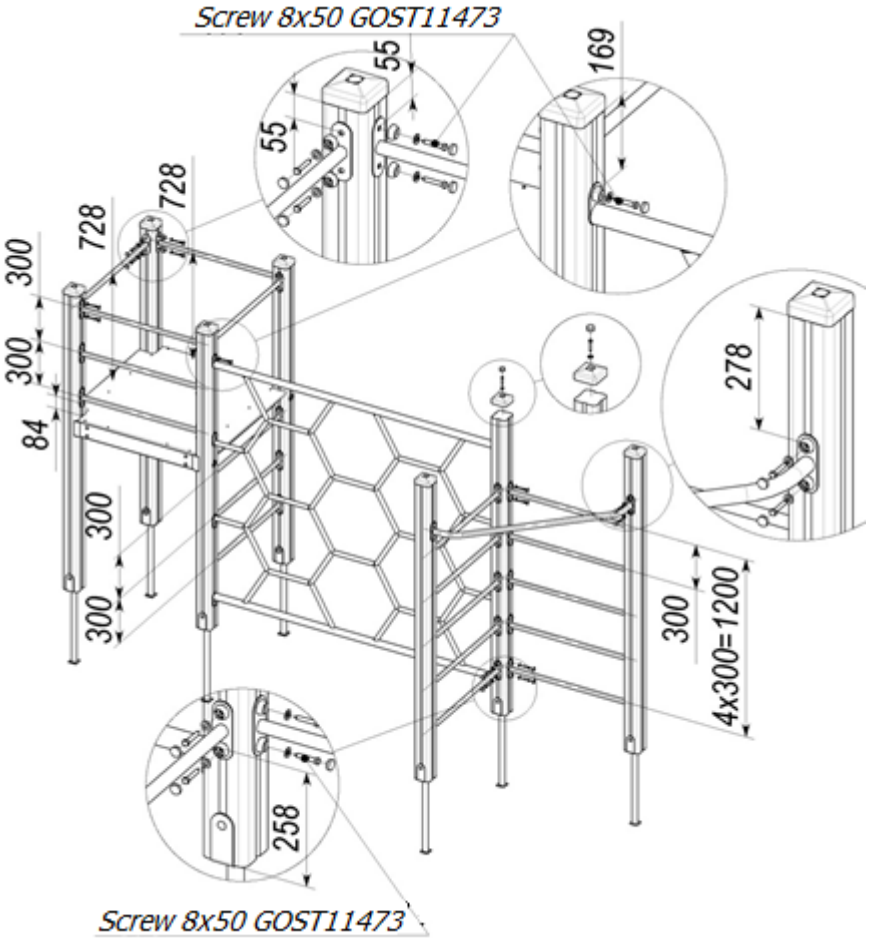

Pic.5

8) Completeness and assembly scheme of incline ascent:

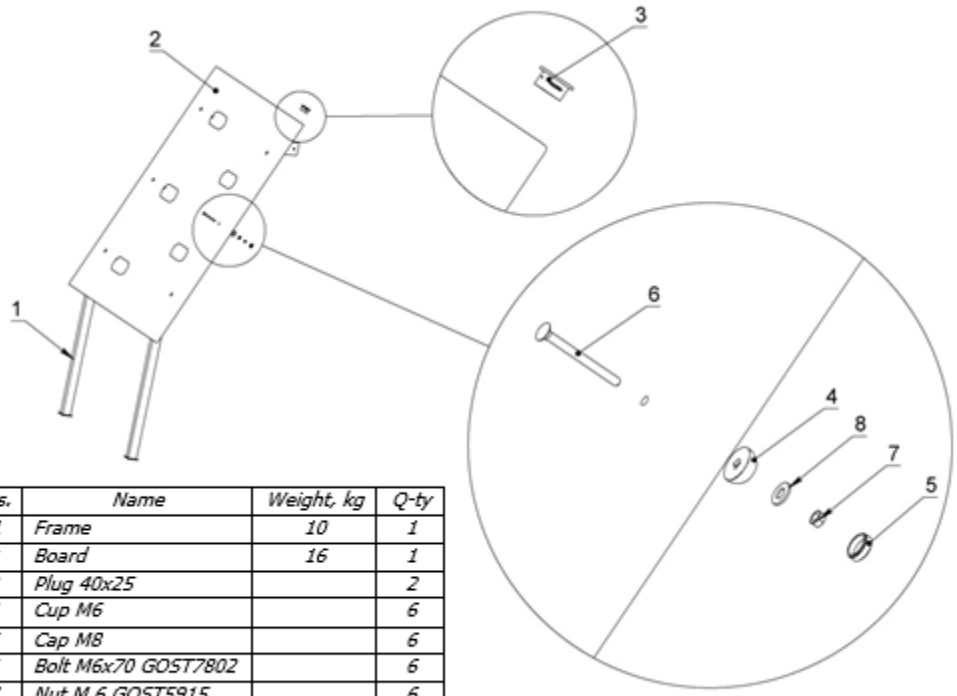

Pos.	Name	Weight, kg	Q-ty
1	Frame	10	1
2	Board	16	1
3	Plug 40x25		2
4	Cup M6		6
5	Cap M8		6
6	Bolt M6x70 GOST7802		6
7	Nut M 6 GOST5915		6
8	Washer 8 GOST11371		6

Pic.6

9) Assemble and install other components of the complex as shown in the picture and in the Appendix. Place standard items (washers, screws) in plastic cups and fasten with caps.

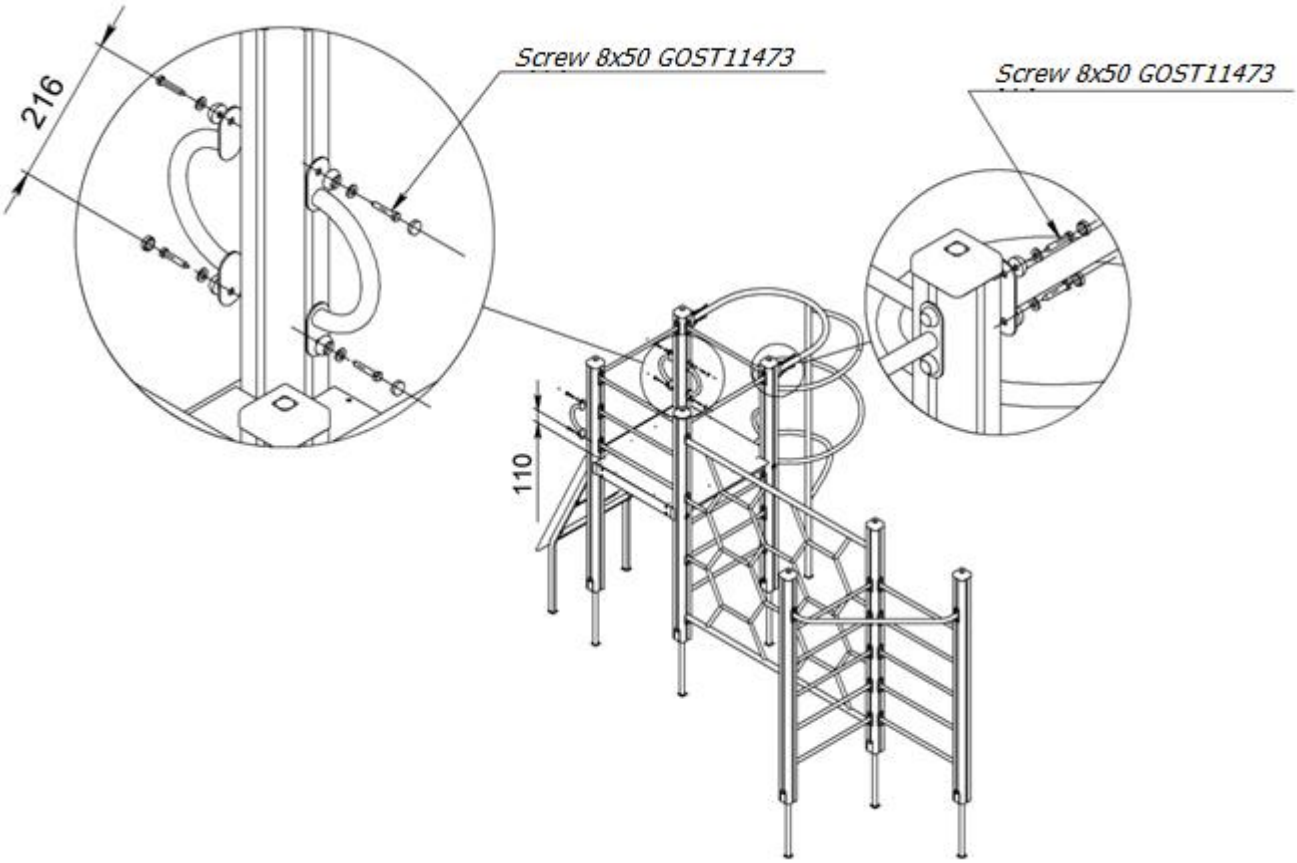

Pic. 7

10) Install the assembled product according to the level.
11) Concrete according to the concreting scheme – during installation on sandy soil increase the size of the recesses by 15-20%.

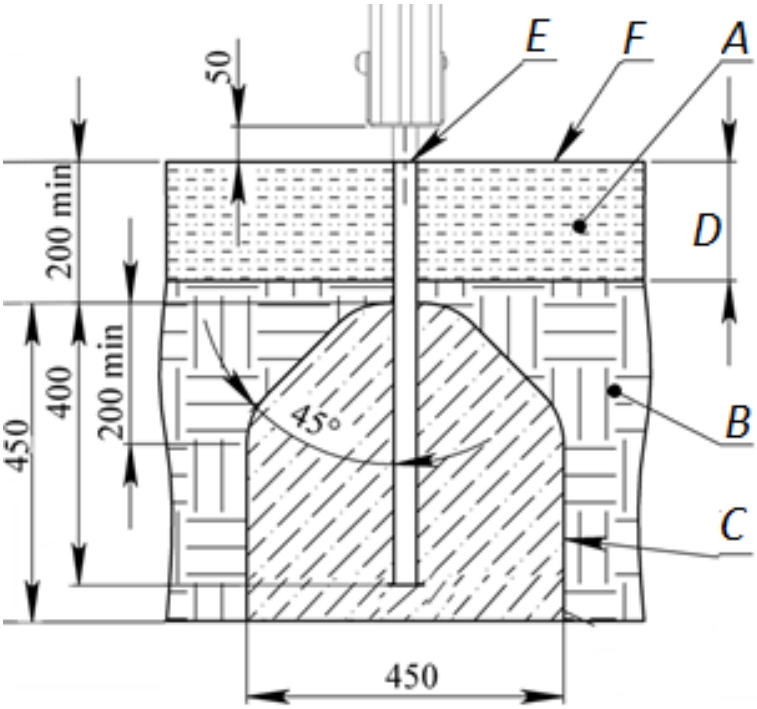

A - shock-absorbing coating;
B – soil;
C – concrete;
D- depth of the shock absorbing coating;
E - product level plane;
F – game surface.

Pic.8

Examples of impact-absorbing coatings

Material[1]	Description	Minimal depth, mm	Height of fall, mm
Turf			≤1000
Tree bark	grain size 20-80 mm	200	≤2000
		300	≤3000
Sawdust	grain size 5-30 mm	200	≤2000
		300	≤3000
Sand[2]	grain size 0,2-2 mm	200	≤2000
		300	≤3000
Gravel[2]	grain size 2-8 mm	200	≤2000
		300	≤3000
Another material	HIC tested according to EN1177	According to the test	According to the test

1. Materials specially prepared for playgrounds.
2. There should not be any clay inclusions. The grain size is obtained by sieving through a sieve as in EN933-1.

5. PRODUCT INSTALLATION SCHEME

Appendix

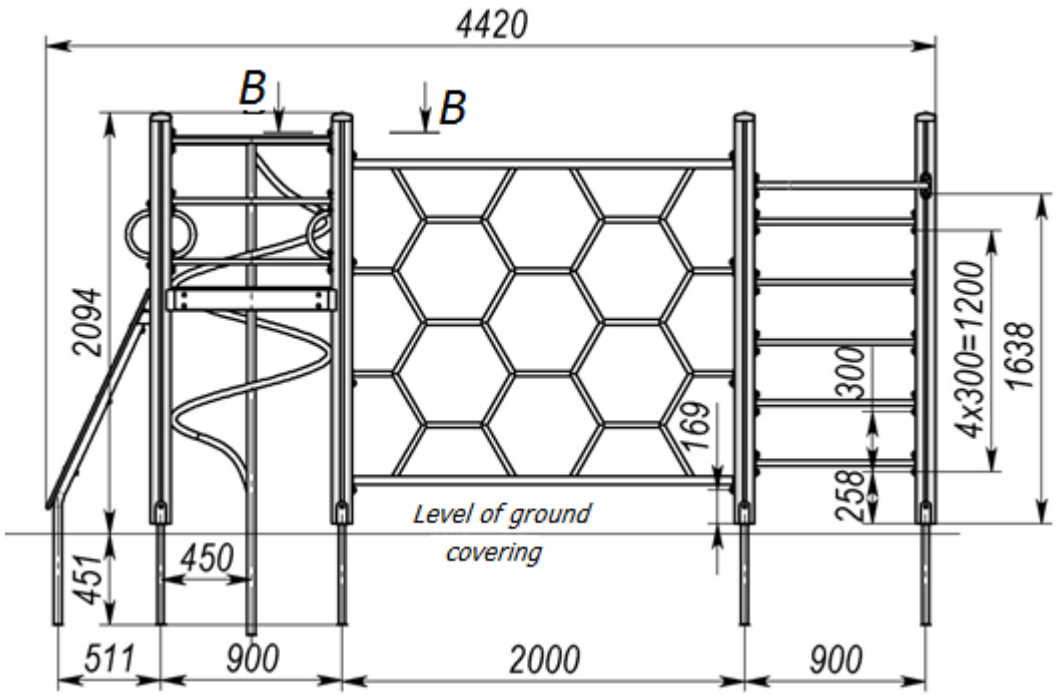
4420
B
B
2094
300
169
4x300=1200
1638
258
Level of ground
covering
451
450
511
900
2000
900

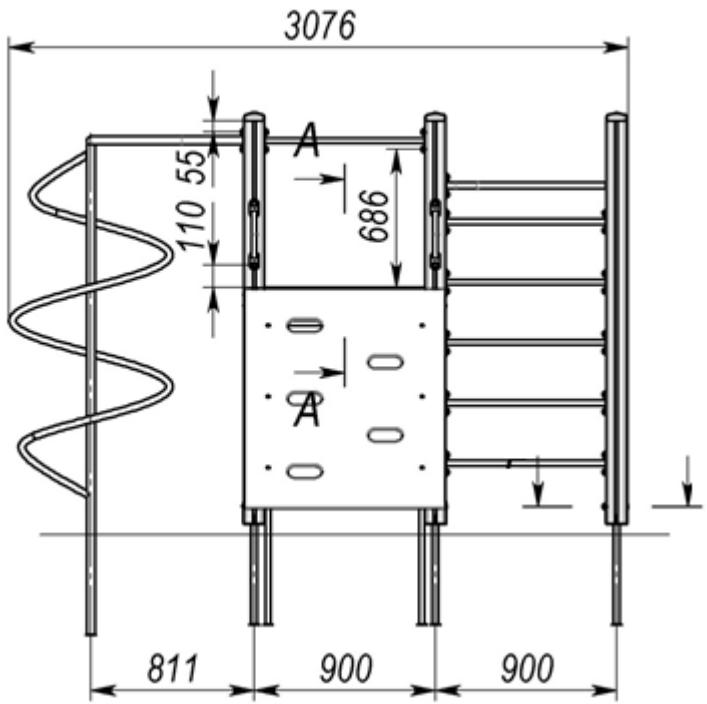
3076
A
A
55
110
686
811
900
900

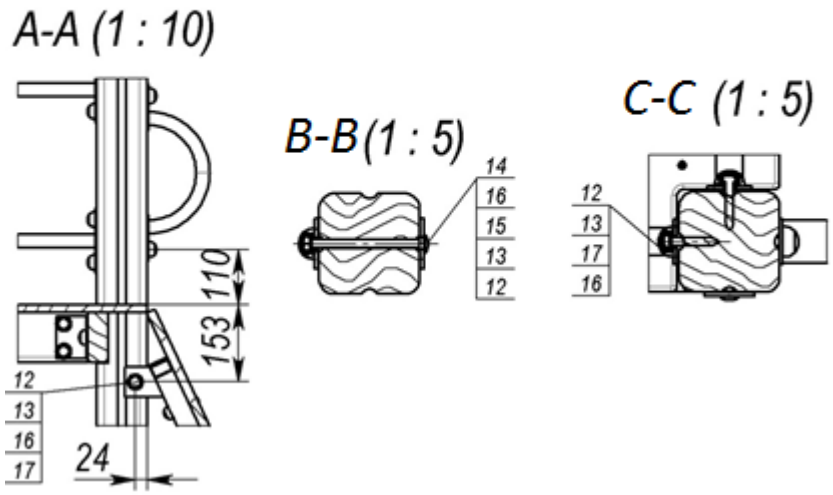
A-A (1 : 10)
110
153
12
13
16
17
24
B-B (1 : 5)
14
16
15
13
12
C-C (1 : 5)
12
13
17
16

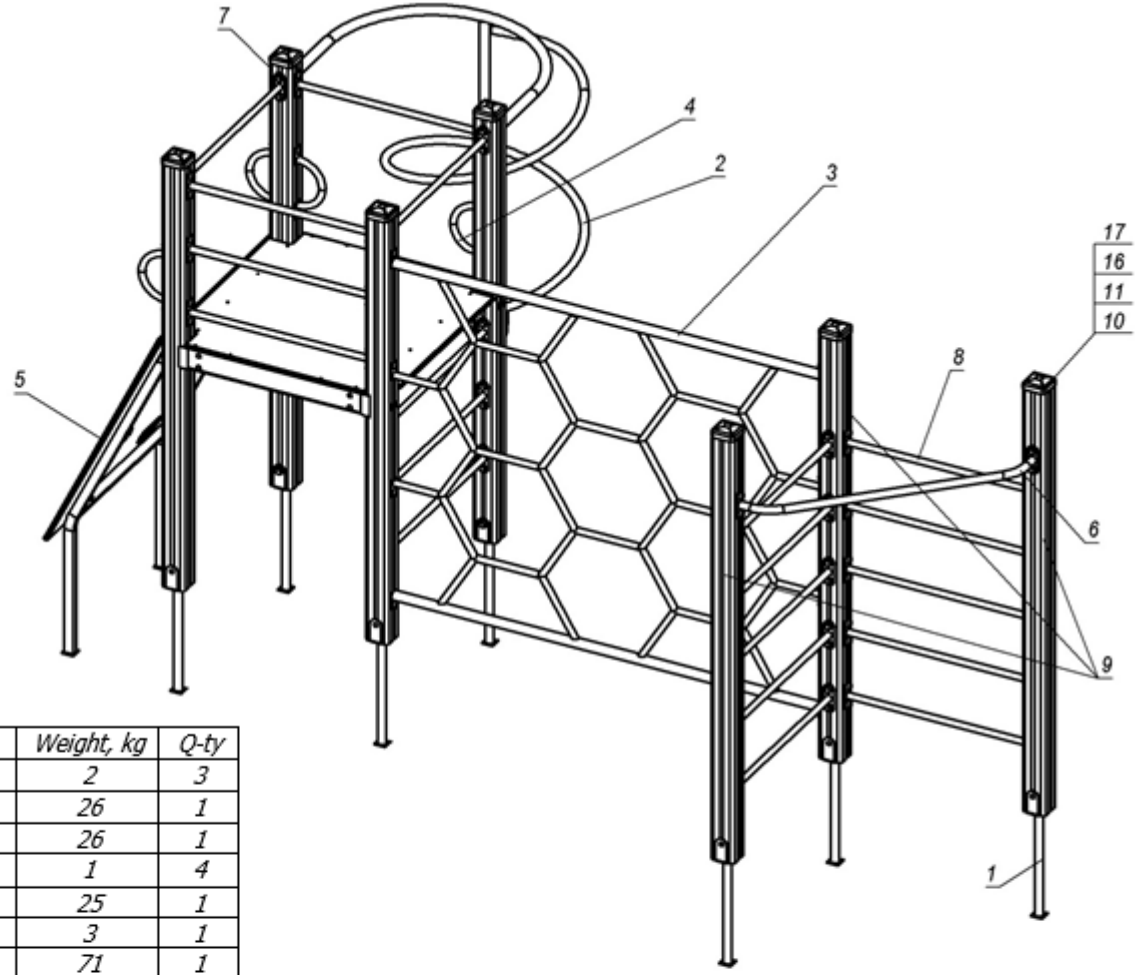

Pos.	Name	Weight, kg	Q-ty
1	Beam support	2	3
2	Spiral ladder	26	1
3	Grate assembly	26	1
4	Small handle	1	4
5	Inclined ascent	25	1
6	Angled crossbar	3	1
7	Tower 1.2m 1x1	71	1
8	Brace rod 0.8m	1	19
9	Middle rack	11	3
10	Cap		3
11	Cap		3
12	Cap M8		97
13	Cup M8		97
14	Bolt M8x120 GOST7802		3
15	Nut M8 GOST5915		3
16	Washer 10 GOST11371		100
17	Screw 8x50 GOST11473		97

Pic.9 - Completeness and characteristics of the product components

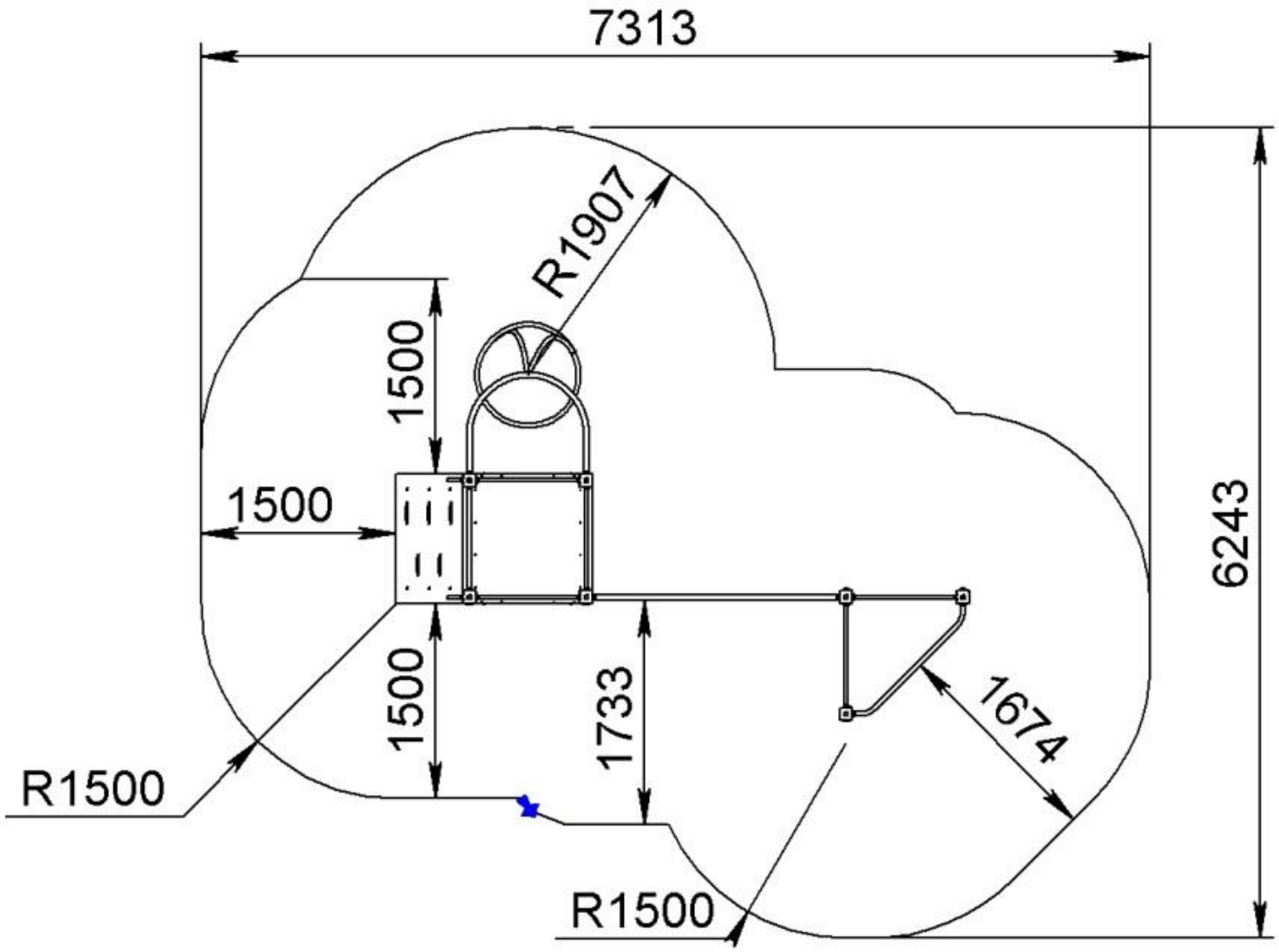

Pic.10 – Safety zone

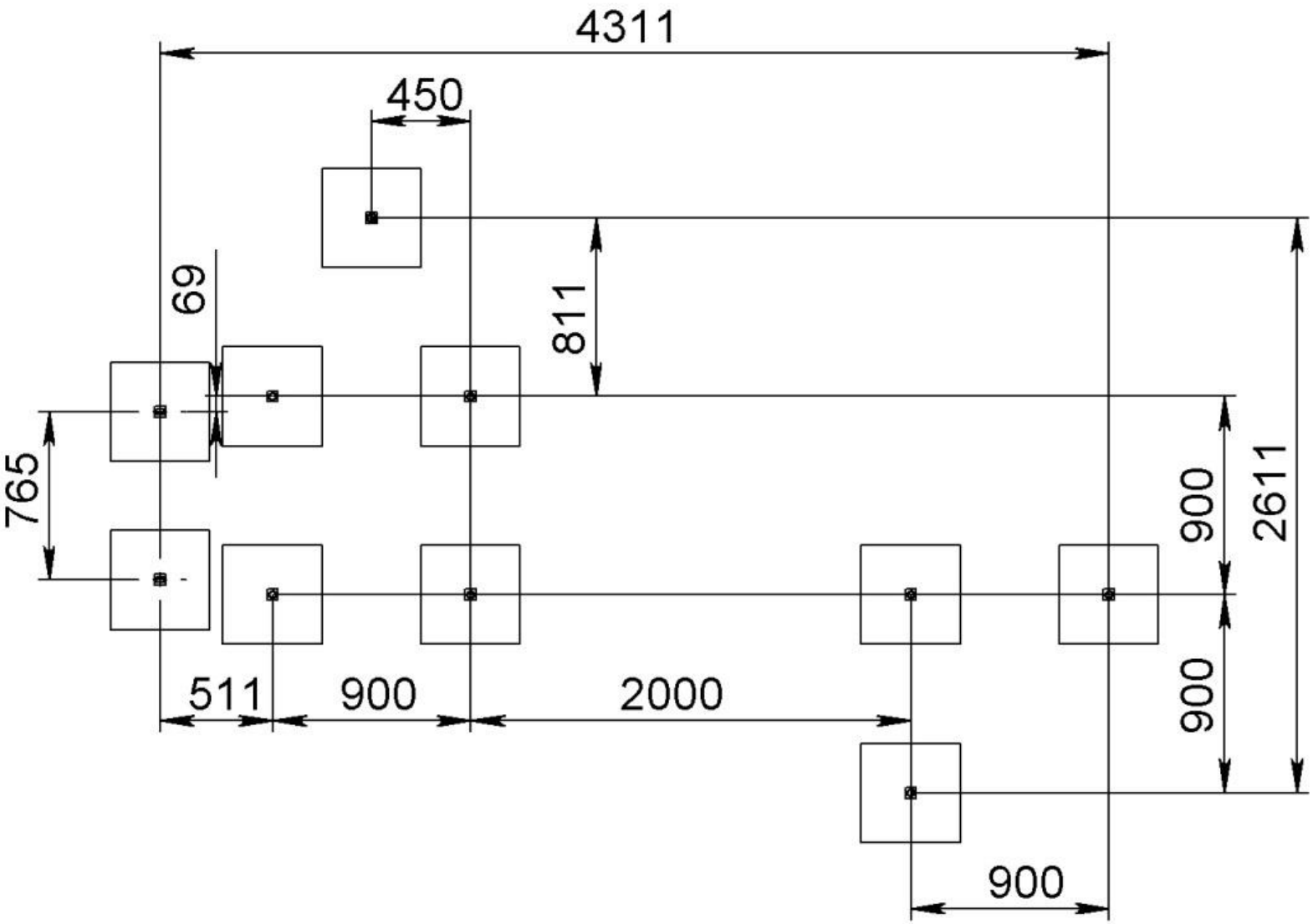

Pic. 11 – Layout of foundations

6. INFORMATION ON STORAGE, TRANSPORTATION AND DISPOSAL

The product is transported in the manufacturer's packaging by any means of transport that ensures its safety and protection from external factors (rain, snow, sunlight, water, high humidity, etc.).

Information about transportation

Date		Brand, state number of the car/trailer	Position, full name	Signature
Departure	Arrival			

Before installation store the product in the original packaging in dry, closed rooms with natural air ventilation.

If it is necessary to transport the product to another location after use it is recommended to use the manufacturer's packaging.

If you need to store the product for a long period of time, you must observe the following storage rules (the list of conditions is not complete):

- place the product in a closed, dry room with natural ventilation;
- protect the product from external factors (dust, water drops, etc.) with a large plastic bag, leaving space for free air circulation;
- take other measures to save the design and features of the product during storage.

Observe the following recommendations when removing the product from storage and preparing for installation:

- remove the product from the packaging material (polyethylene, cardboard, other packaging materials);
- remove dust and other contaminants from the surface of the product;
- check that the parts are complete and not damaged.

Information about storage

Date		Product storage conditions	Full name	Signature
Putting into storage	Removal from storage			

After the end of the equipment's service life, the buyer determines the procedure for its usage by himself. If you decide to recycle the equipment, please contact the seller or specialised organisations.

The equipment does not contain any harmful impurities or materials that can harm your health and is does not need special recycling.

7. PRODUCT USE

Do not use the product until it has been fully and completely installed.

The product must not be used by users of a different age category.

The product must not be used by users of a different weight category.

Before using the product, clear the safety area of any unnecessary objects that may cause damage to the user (debris, tools left over from assembly and installation, etc.).

Do not use the product in adverse weather conditions (ice, snow, rain, hail, strong winds, etc.), which may cause injury to the user.

8. PRODUCT MAINTENANCE

You have purchased high-quality and reliable equipment. In the process of its production, the requirements of regulatory and technical documents of Ukraine, the CIS countries and the European Union regulating the production of children's gaming equipment were taken into account. However, it should not be forgotten that when operating any technical product, certain rules and requirements must be followed. Despite the fact that our product is of high quality and reliability, this rule applies to it in full. You should be aware that the implementation of the following rules and recommendations for product maintenance is aimed at ensuring that your child, the child of your friends or acquaintances is safe and no unforeseen factors threaten his health, life.

Remember that the operation of the product is accompanied by the influence of various negative factors on it, a complete list of which cannot be predicted. Among them, an important place is occupied by natural factors and factors caused by human influence on equipment. As a rule, their action initially leads to disruptions in the appearance of the product. Thus, under the influence of factors caused by the exploitation of a person, there may be damage to the integrity of the paint coating of parts made of wood, in the form of scuffs, chips, incisions, and when exposed to parts made of metal, damage to the paint coating in the form of nicks, chips, abrasion, etc. This leads to the emergence and development of defects that can be the cause of the destruction of the product. The product is particularly dangerous if it is used for other than its intended purpose, if the permissible loads are exceeded, or if vandalism occurs, as these factors can cause irreversible changes in the structure of the material from which the product is made, leading to destruction.

The maintenance of the product implies, first of all, the responsibility of the user to comply with all recommendations provided in this document, starting with a daily inspection of the external condition of the product before operation.

Daily inspection of the product is a very important procedure. With its help, you can timely detect any changes in the appearance of the product (deformation of individual parts, deformation of the structure as a whole or part of it, damage to parts, cracks of welds, as well as the absence of fastening of parts of the product, etc.).

Before using the product, check its operability, absence of damage, dirt on the product, sharp edges, reliability of fixing the structure, absence of unnecessary objects on the surface of the site. If the product is damaged, fully or partially inoperable, or has any other defects, do not use it.

During operation it is also necessary to inspect the condition of the product periodically - the current inspection. It includes an external inspection of the product, checking its operability (in the presence of moving elements - the smoothness of the movement of mechanisms, compliance with operating modes, etc.). Current inspection allows you to detect malfunctions caused by the operation of equipment, climatic conditions, acts of vandalism and other factors, until they reach a critical level and the destruction of the product. The current inspection is carried out in order to detect foreign objects that may threaten the user and lead to violations of the functioning of the product. The frequency of the current inspection is set by the owner taking into account the operating conditions. If you do not have sufficient technical knowledge and skills to conduct such inspections, we recommend you to contact the authorized specialists of the manufacturer in order to obtain advice.

Every three months, a scheduled inspection should be carried out, which primarily concerns the foundation part, load-bearing elements and connection nodes of elements (their integrity and degree of deterioration).

The main annual inspection must be carried out annually by authorised specialists of the manufacturer. During the inspection, the technical condition of the equipment shall be assessed for compliance with safety requirements. The degree of deterioration and damage to wooden elements and their ability to withstand the applied loads, damage, corrosion of metal elements and the impact of these factors on the safety of the product are determined. The inspection also helps to identify the impact of repairs, if any, on the safety of the equipment.

Based on the results of the inspection, a maintenance procedure is carried out to eliminate the identified discrepancies in the product's operation. This procedure includes assessing the condition of parts and assemblies, replacing worn parts, and restoring the integrity of protective coatings. The results of the inspections, as well as the procedures carried out as a result of the inspection and maintenance of the product must be properly documented in the Registration Journal, which is an integral part of this passport. The owner of the product must keep the acts of maintenance of the product, acts of repair work done.