interatletika™

PRODUCTION AND SALE OF SPORTS GOODS
Customer support:
+38 095 273 81 53
play.interatletika.com

DATA SHEET

Playground complex "River station (Mini)" T920.1

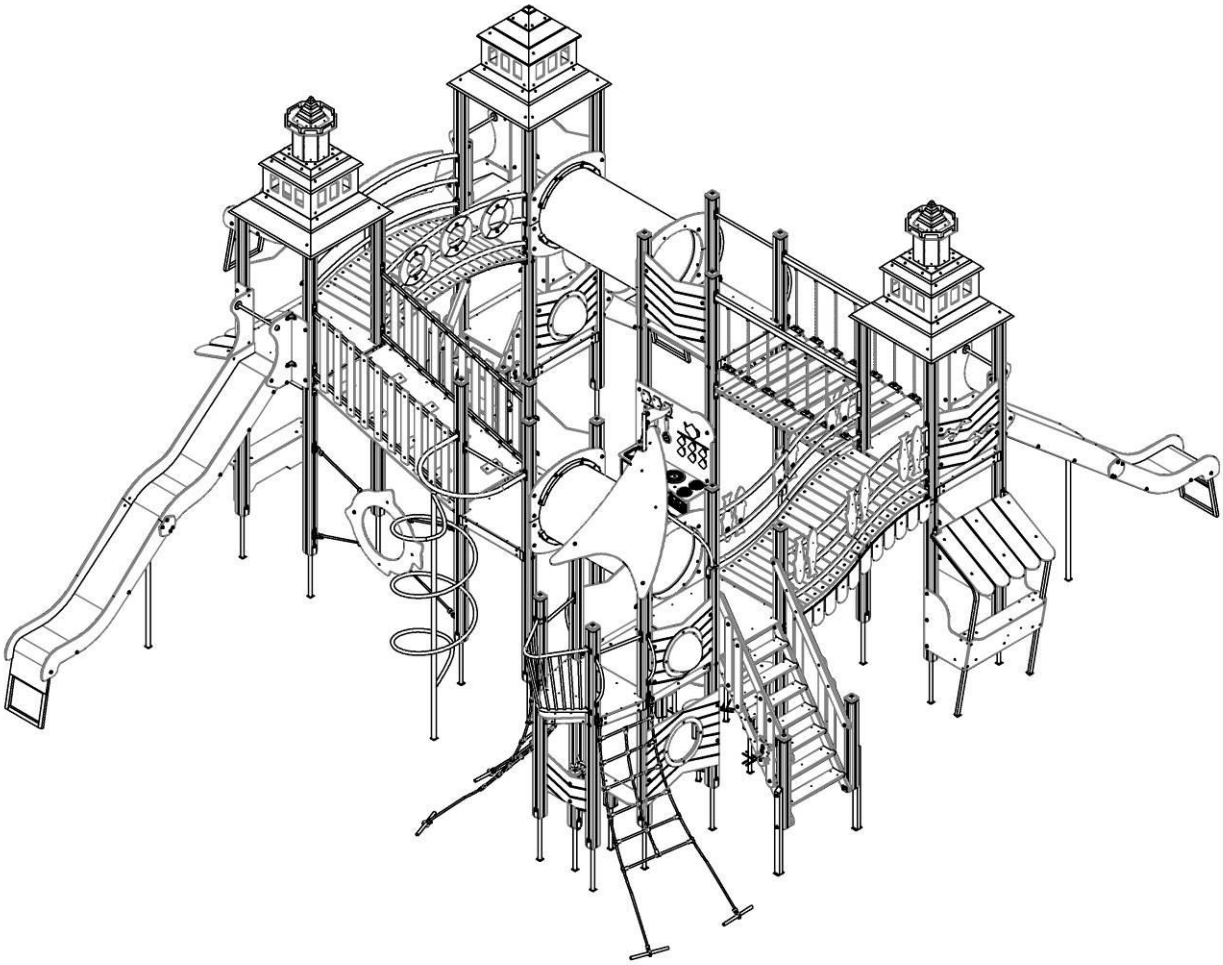

CONTENT

1. GENERAL INFORMATION 3
2. PROCEDURE FOR ASSEMBLING AND INSTALLING THE PRODUCT 3
3. PRODUCT USE 3
4. PRODUCT MAINTENANCE 3
5. INFORMATION ON STORAGE, TRANSPORT AND DISPOSAL 4
6. TECHNICAL CHARACTERISTICS AND ASSEMBLY SCHEMES 4

FOR NOTES

1. GENERAL INFORMATION

Purpose and content of this document. This document contains a general description of the equipment, information on installation, intended use, maintenance, current repair and manufacturer's warranty.

Distribution of this document for product modifications. The manufacturer can make changes to the design of the product, aimed at improving its characteristics, changing the design, etc. This document may not contain a description of such changes, but applies to such modified products.

2. PROCEDURE FOR ASSEMBLING AND INSTALLING THE PRODUCT

Tools and accessories. The product does not include the tools required for assembly and installation.

Product assembly and installation procedure.

1) Mark the area as indicated on the layout of the playground foundations.
2) Dig the holes for installing embedded parts and attached elements. Level the depth of the holes by deepening them or adding the gravel.
3) Assemble and install the equipment according to assembly schemes – chapter 7.
4) Concrete embedded parts and support constructions of attached elements. During installation of the product on sandy soil, the overall dimensions of the foundation should be increased by 15-20%.
5) Arrange the zone of shock-absorbing coating.

3. PRODUCT USE

Do not use the product until it has been fully and completely installed.

The product should not be used by users of a different age category.

Do not use the product by users of a different weight category.

Before using the product, clear the safety area from unnecessary objects that may cause harm to the user (debris, tools left after assembly and installation, etc.).

Do not use the product in adverse weather conditions (ice, snow, rain, hail, strong winds, etc.), which may cause injury to the user.

4 PRODUCT MAINTENANCE

You have purchased high-quality and reliable equipment. In the process of its production, the requirements of regulatory and technical documents of Ukraine, the CIS countries and the European Union regulating the production of children's gaming equipment were taken into account. However, it should not be forgotten that when operating any technical product, certain rules and requirements must be followed. Despite the fact that our product is of high quality and reliability, this rule applies to it in full. You should be aware that the implementation of the following rules and recommendations for product maintenance is aimed at ensuring that your child, the child of your friends or acquaintances is safe and no unforeseen factors threaten his health, life.

Remember that the operation of the product is accompanied by the influence of various negative factors on it, a complete list of which cannot be predicted. Among them, an important place is occupied by natural factors and factors caused by human influence on equipment. As a rule, their action initially leads to disruptions in the appearance of the product. Thus, under the influence of factors caused by the exploitation of a person, there may be damage to the integrity of the paint coating of parts made of wood, in the form of scuffs, chips, incisions, and when exposed to parts made of metal, damage to the paint coating in the form of nicks, chips, abrasion, etc. This leads to the emergence and development of defects that can be the cause of the destruction of the product. The product is particularly dangerous if it is used for other than its intended purpose, if the permissible loads are exceeded, or if vandalism occurs, as these factors can cause irreversible changes in the structure of the material from which the product is made, leading to destruction.

The maintenance of the product implies, first of all, the responsibility of the user to comply with all recommendations provided in this document, starting with a daily inspection of the external condition of the product before operation.

Daily inspection of the product is a very important procedure. With its help, you can timely detect any changes in the appearance of the product (deformation of individual parts, deformation of the structure as a whole or part of it, damage to parts, cracks of welds, as well as the absence of fastening of parts of the product, etc.).

Before using the product, check its operability, absence of damage, dirt on the product, sharp edges, reliability of fixing the structure, absence of unnecessary objects on the surface of the site. If the product is damaged, fully or partially inoperable, or has any other defects, do not use it.

During operation it is also necessary to inspect the condition of the product periodically - the current inspection. It includes an external inspection of the product, checking its operability (in the presence of moving elements - the smoothness of the movement of mechanisms, compliance with operating modes, etc.). Current inspection allows you to detect malfunctions caused by the operation of equipment, climatic conditions, acts of vandalism and other factors, until they reach a critical level and the destruction of the product. The current inspection is carried out in order to detect foreign objects that may threaten the user and lead to violations of the functioning of the product. The frequency of the current inspection is set by the owner taking into account the operating conditions. If you do not have sufficient technical knowledge and skills to conduct such inspections, we recommend you to contact the authorized specialists of the manufacturer in order to obtain advice.

Every three months, a scheduled inspection should be carried out, which primarily concerns the foundation part, load-bearing elements and connection nodes of elements (their integrity and degree of deterioration).

The main annual inspection must be carried out annually by authorised specialists of the manufacturer. During

the inspection, the technical condition of the equipment shall be assessed for compliance with safety requirements. The degree of deterioration and damage to wooden elements and their ability to withstand the applied loads, damage, corrosion of metal elements and the impact of these factors on the safety of the product are determined. The inspection also helps to identify the impact of repairs, if any, on the safety of the equipment.
Based on the results of the inspection, a maintenance procedure is carried out to eliminate the identified discrepancies in the product's operation. This procedure includes assessing the condition of parts and assemblies, replacing worn parts, and restoring the integrity of protective coatings. The results of the inspections, as well as the procedures carried out as a result of the inspection and maintenance of the product must be properly documented in the Registration Journal, which is an integral part of this passport. The owner of the product must keep the acts of maintenance of the product, acts of repair work.

5. INFORMATION ON STORAGE, TRANSPORT AND DISPOSAL

The product is transported in the manufacturer's packaging by any means of transport that ensures its safety and protection from external factors (rain, snow, sunlight, water, high humidity, etc.).

Information about transportation

Date		Brand, state number of the ca/trailer	Position, full name	Signa-ture
Departure	Arrival			

Before installation, store the product in the original packaging in dry, closed rooms with natural air ventilation.

If it is necessary to transport the product to another location after use, it is recommended to use the manufacturer's packaging.

If long-term storage of the product is required, the following storage rules must be observed (the list of conditions is not complete):

- place the product in a closed dry room with natural ventilation;
- protect the product from external factors (dust, water drops, etc.) with a large plastic bag, leaving space for free air circulation;
- take other measures to preserve the appearance and characteristics of the product during storage.

When removing the product from storage and preparing for installation, follow the next recommendations:

- remove the product from the packaging material (polyethylene, cardboard, other packaging materials);
- remove dust and other contaminants from the surface of the product;
- check completeness and absence of parts damages.

Storage information

Date		Product storage conditions	Full name	Signature
Putting into storage	Removal from storage			

After the end of the equipment's service life, the buyer independently determines the procedure for its use. If you decide to recycle, contact the seller or specialized organizations.

The equipment does not contain harmful impurities and materials that can harm your health and is not subject to special recycling.

7. TECHNICAL CHARACTERISTICS AND ASSEMBLY SCHEMES

Length, mm	**10799**
Width, mm	**10287**
Height, mm	**4836**
Weight, kg	**2004**
Fall height, mm	**2028**
Age restrictions, years	**from 7 to 12**
Weight restrictions, kg	**Up to 60**

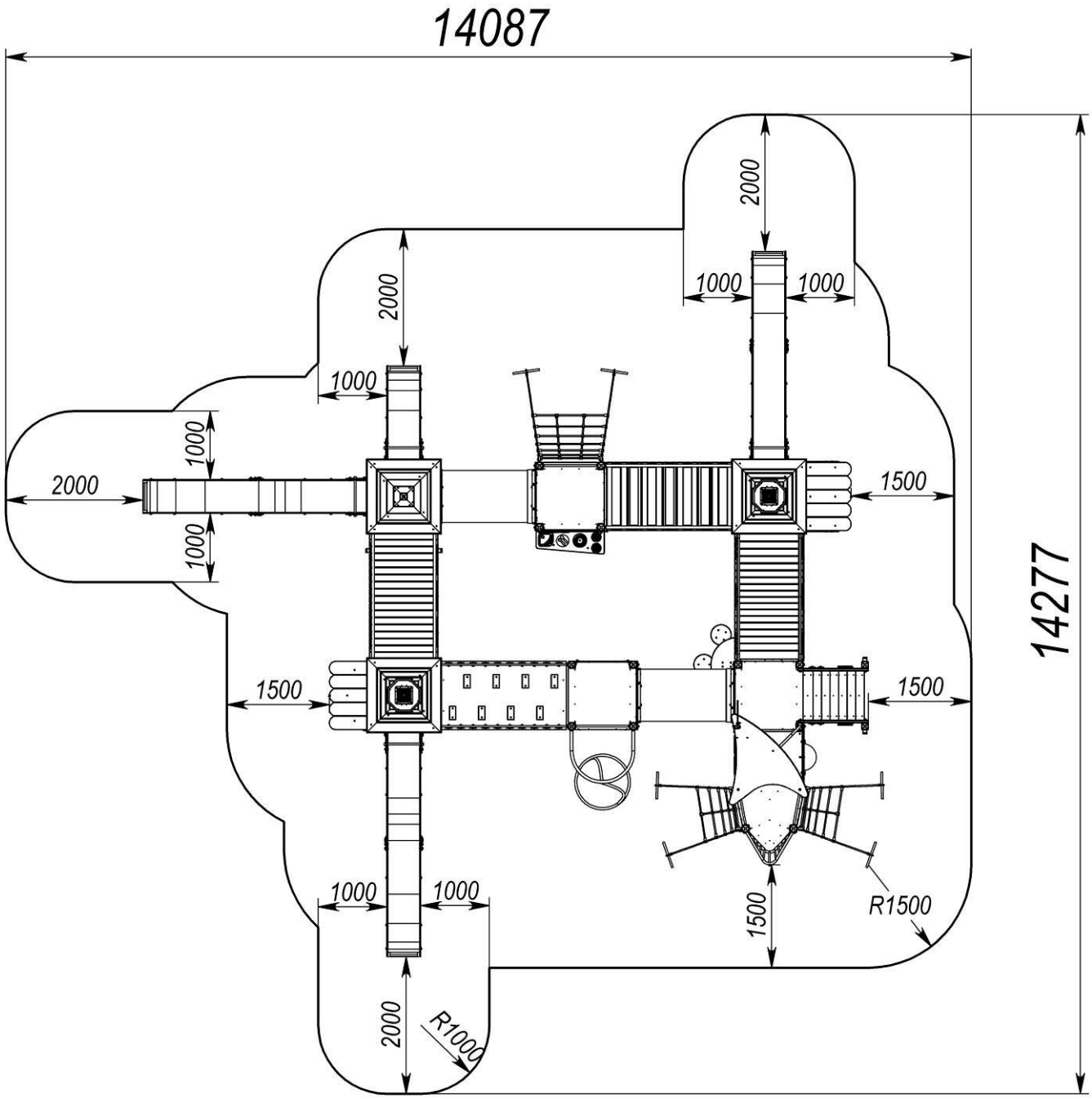

Picture 1 – Safety zone

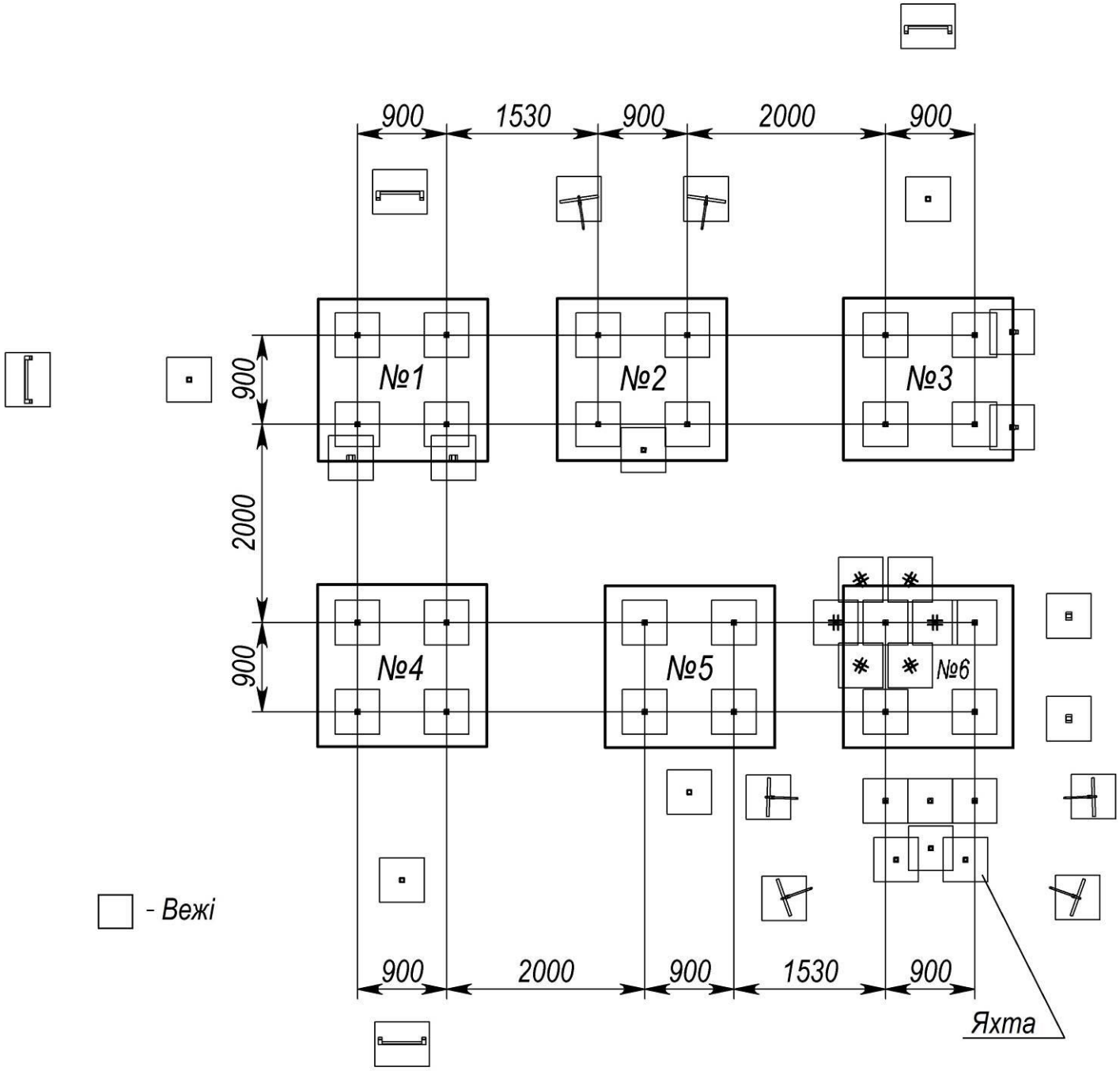

Picture 2 – Layout of the towers

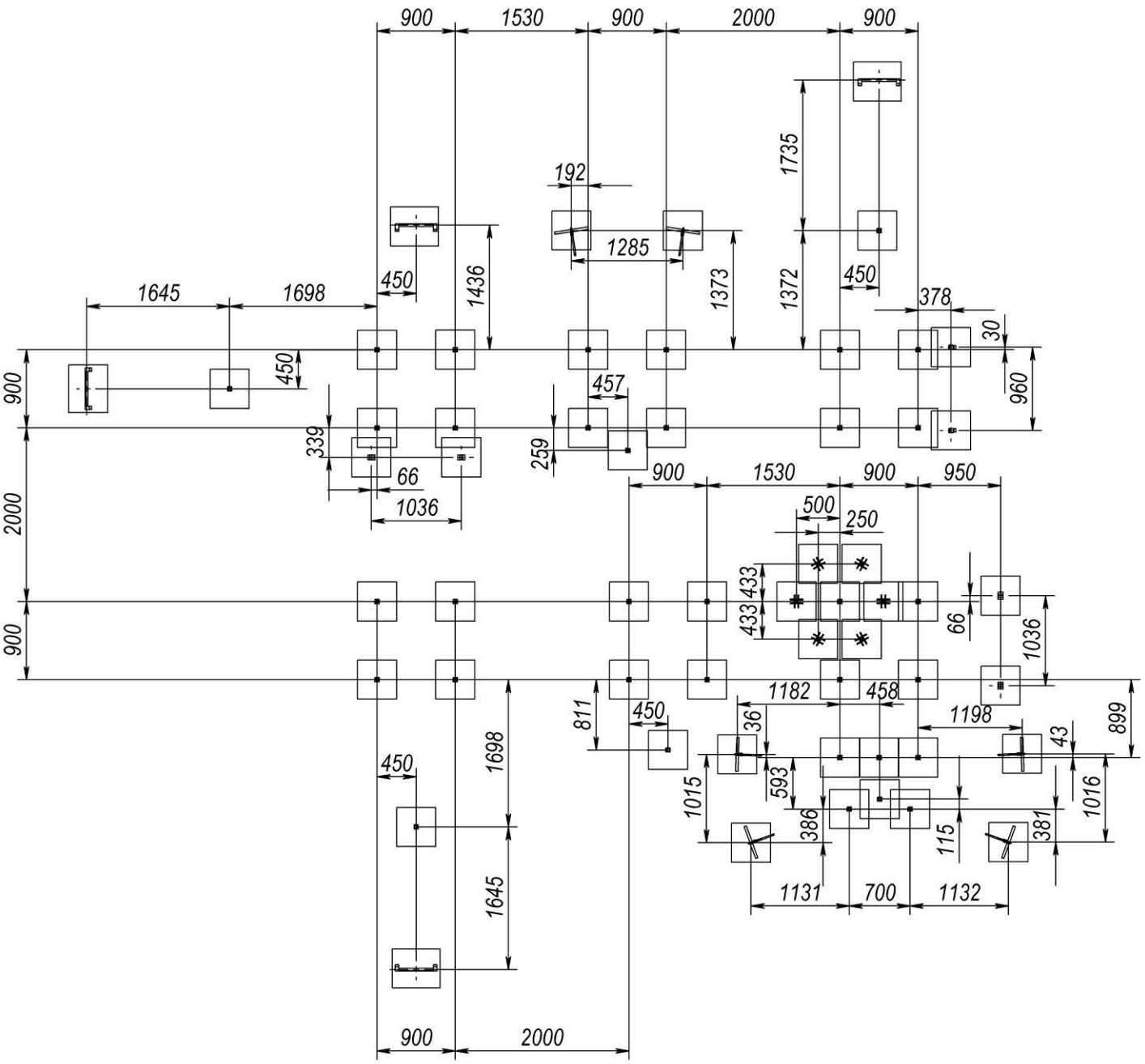

Picture 3 – Layout of foundations

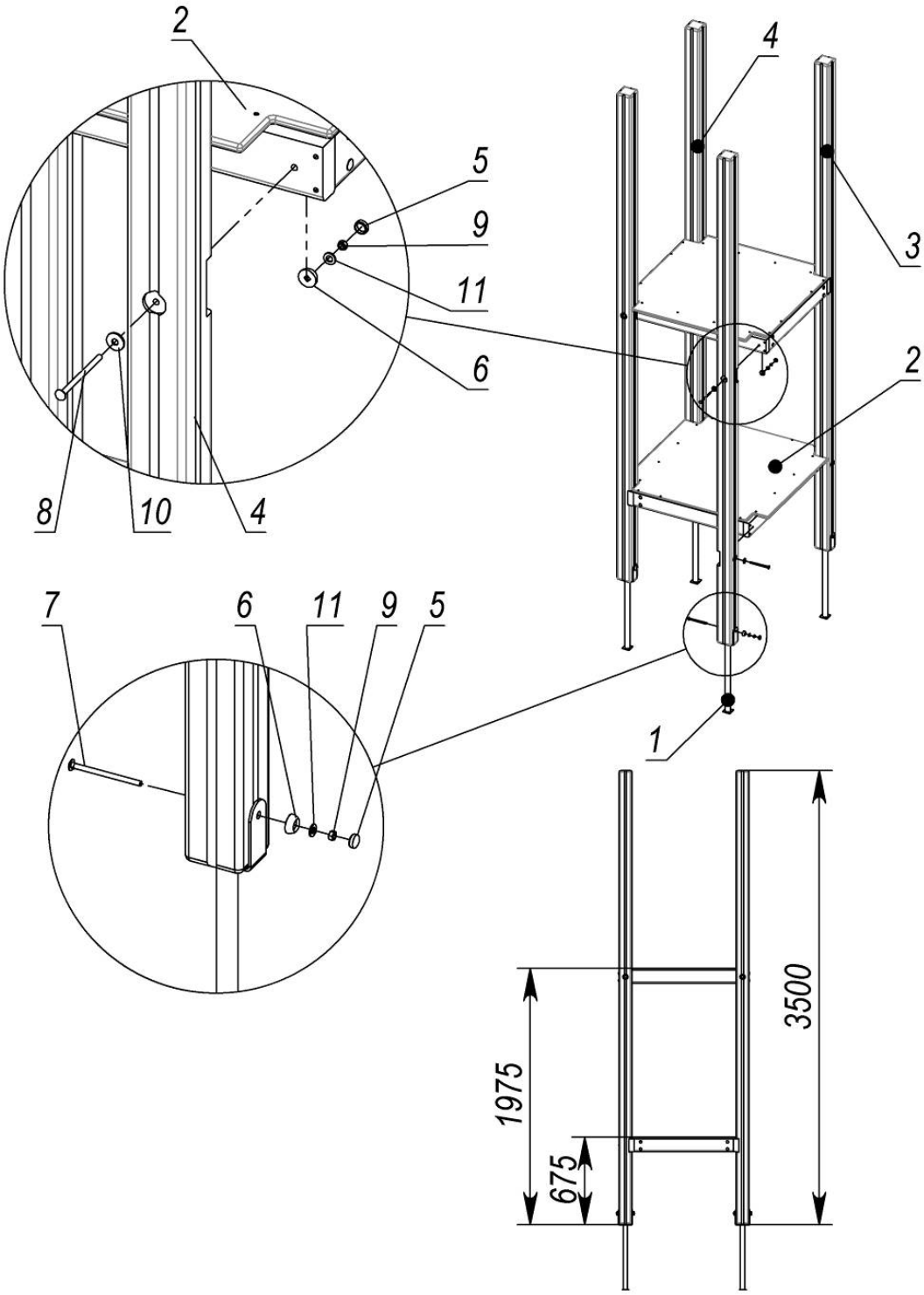

Pos.	Name	Weight, kg	Q-ty
1	Beam support	2	4
2	Site	19	2
3	Beam 3.5 m	11	2
4	Beam 3.5 m	20	2
5	Cap M8		12
6	Cup M8		12
7	Bolt M8x120 GOST7802		4
8	Bolt M8x130 GOST7802		8
9	Nut M8 GOST5915		12
10	Washer 10 GOST6958		8
11	Washer 10 GOST11371		12

Picture 4 – Completeness and tower assembly scheme 0,7x2m (beam 3,5m)
Marked under №1 on the picture 2

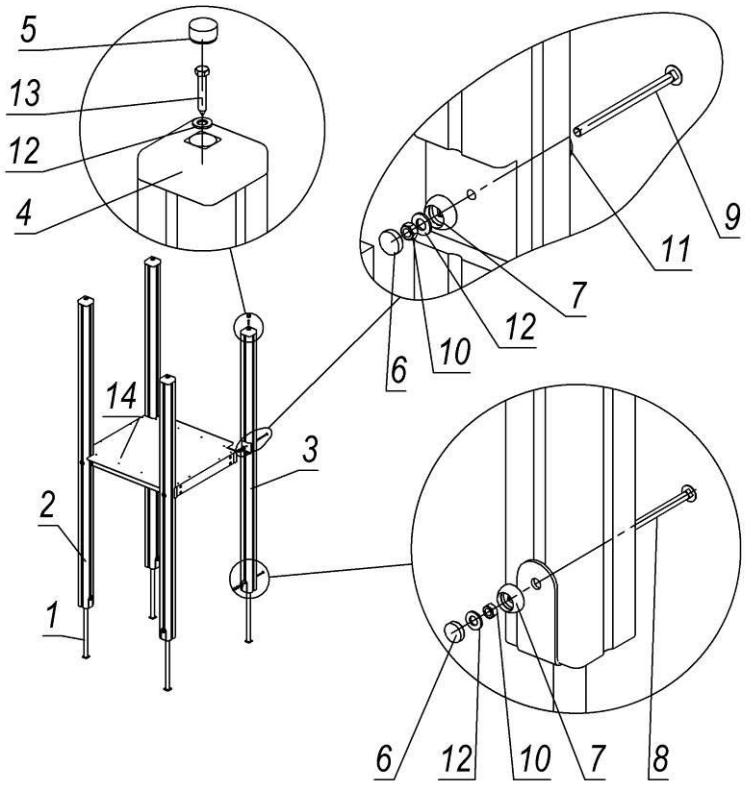

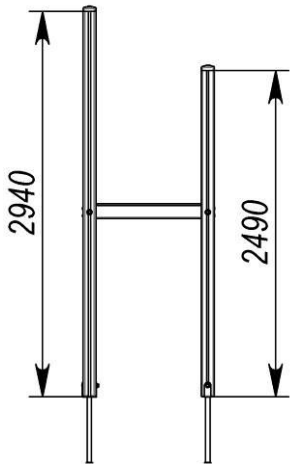

Pos.	Name	Weight, kg	Q-ty
1	Beam support	2	4
2	Beam	17	2
3	Beam	15	2
4	Cap		4
5	Cap		4
6	Cap M8		8
7	Cup M8		8
8	Bolt M8x120 GOST7802		4
9	Bolt M8x130 GOST7802		4
10	Nut M8 GOST5915		8
11	Washer 10 GOST6958		4
12	Washer 10 GOST11371		12
13	Screw 8x50 GOST11473		4
14	Site	19	1

Picture 5 – Completeness and tower assembly scheme 1,5m (beam 2,5-2,95). Marked under №5 on the picture 2

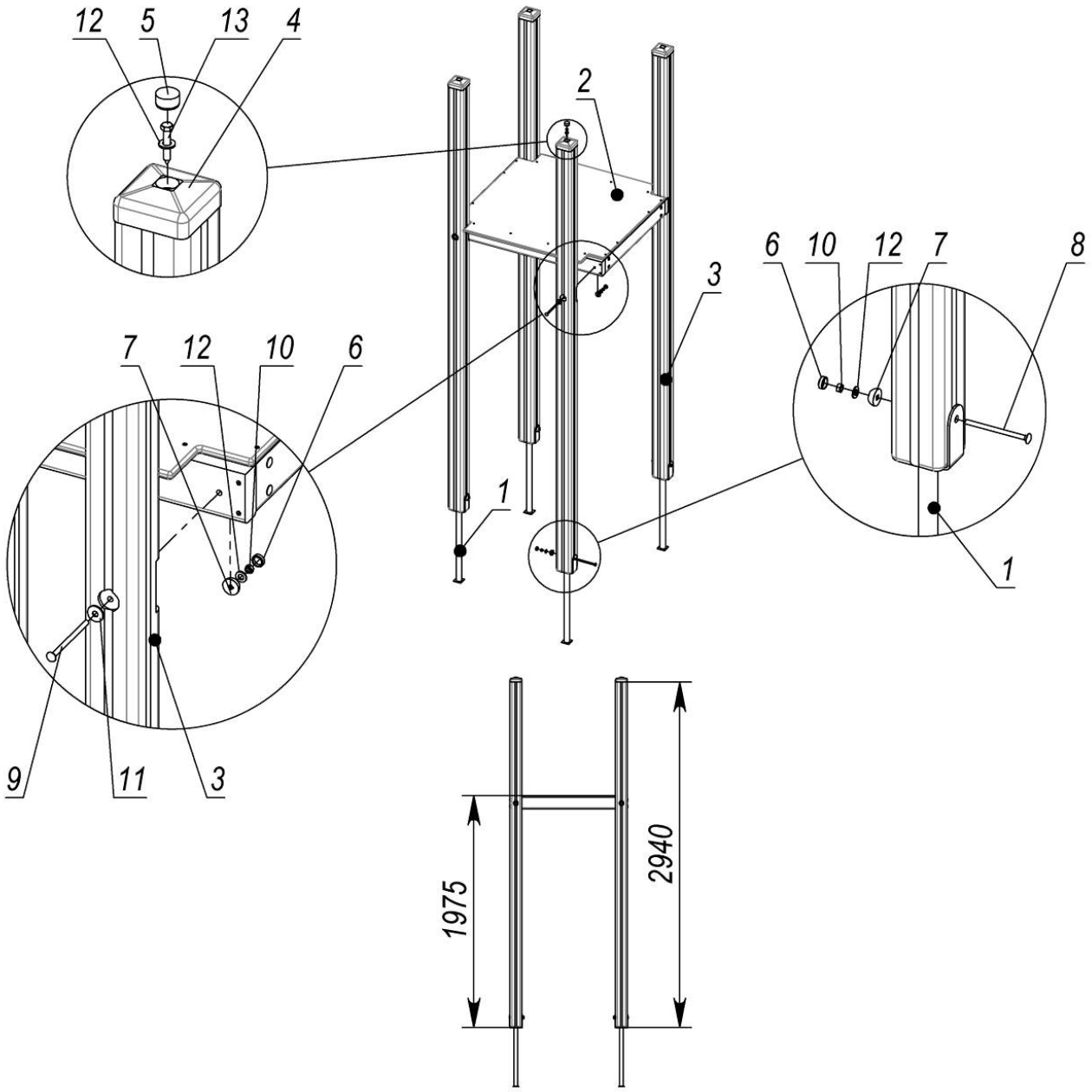

Pos.	Name	Weight, kg	Q-ty
1	Beam support	2	4
2	Site	19	1
3	Beam 2.95 m	17	4
4	Cap on bar		4
5	Cap on bar		4
6	Cap M8		8
7	Cup M8		8
8	Bolt M8x120 GOST7802		4
9	Bolt M8x130 GOST7802		4
10	Nut M8 GOST5915		8
11	Washer 10 GOST6958		4
12	Washer 10 GOST11371		12
13	Screw 8x50 GOST11473		4

Picture 6 – Completeness and tower assembly scheme 2m 1x1.
Marked under №2 on the picture 2

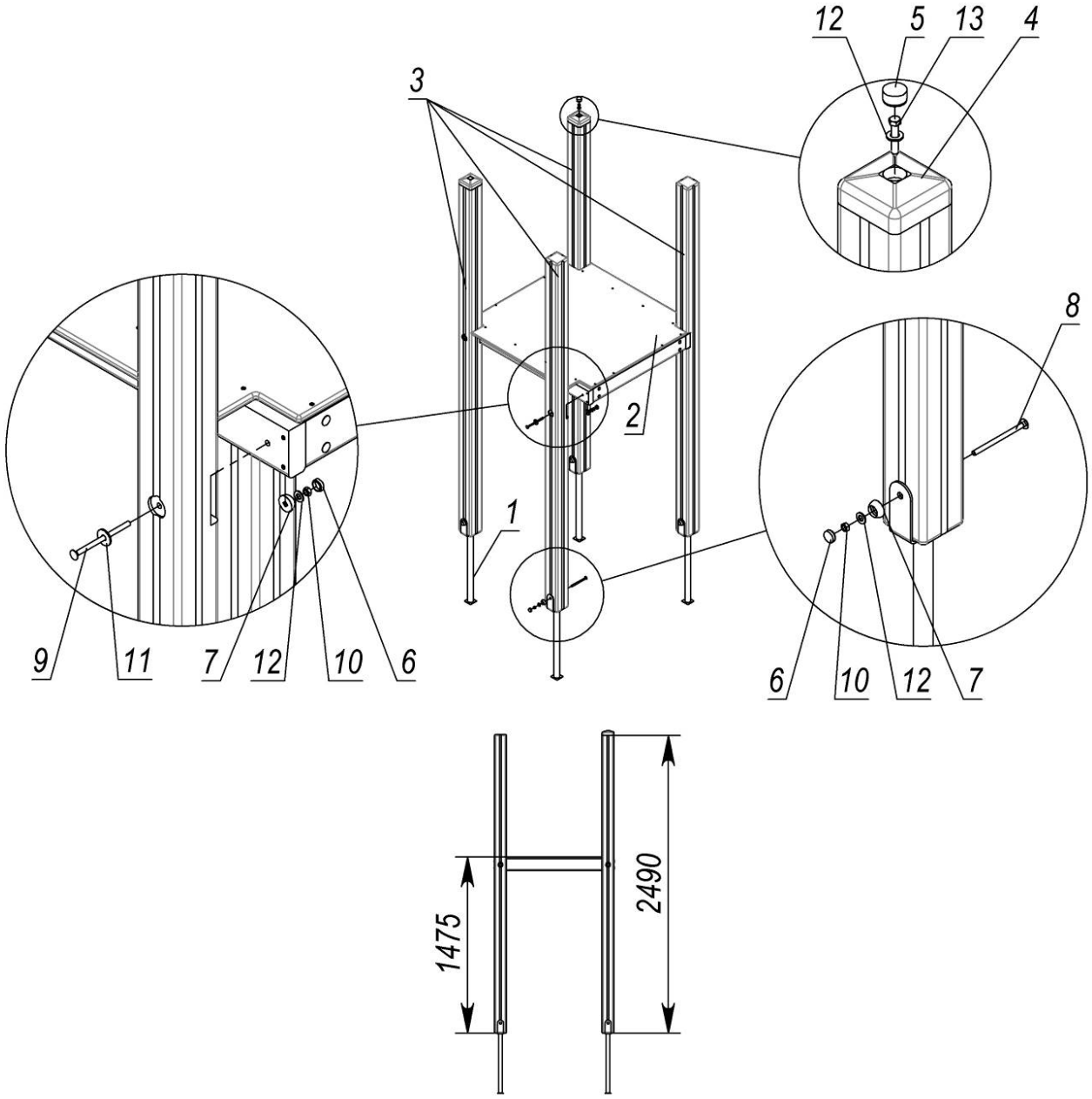

Pos.	Name	Weight, kg	Q-ty
1	Beam support	2	4
2	Site	19	1
3	Beam	15	4
4	Cap		2
5	Cap		2
6	Cap M8		8
7	Cup M8		8
8	Bolt M8x120 GOST7802		4
9	Bolt M8x130 GOST7802		4
10	Nut M8 GOST5915		8
11	Washer 10 GOST6958		4
12	Washer 10 GOST11371		10
13	Screw 8x50 GOST11473		2

Picture 7 – Completeness and tower assembly scheme 1,5m. Marked under №6 on the picture 2

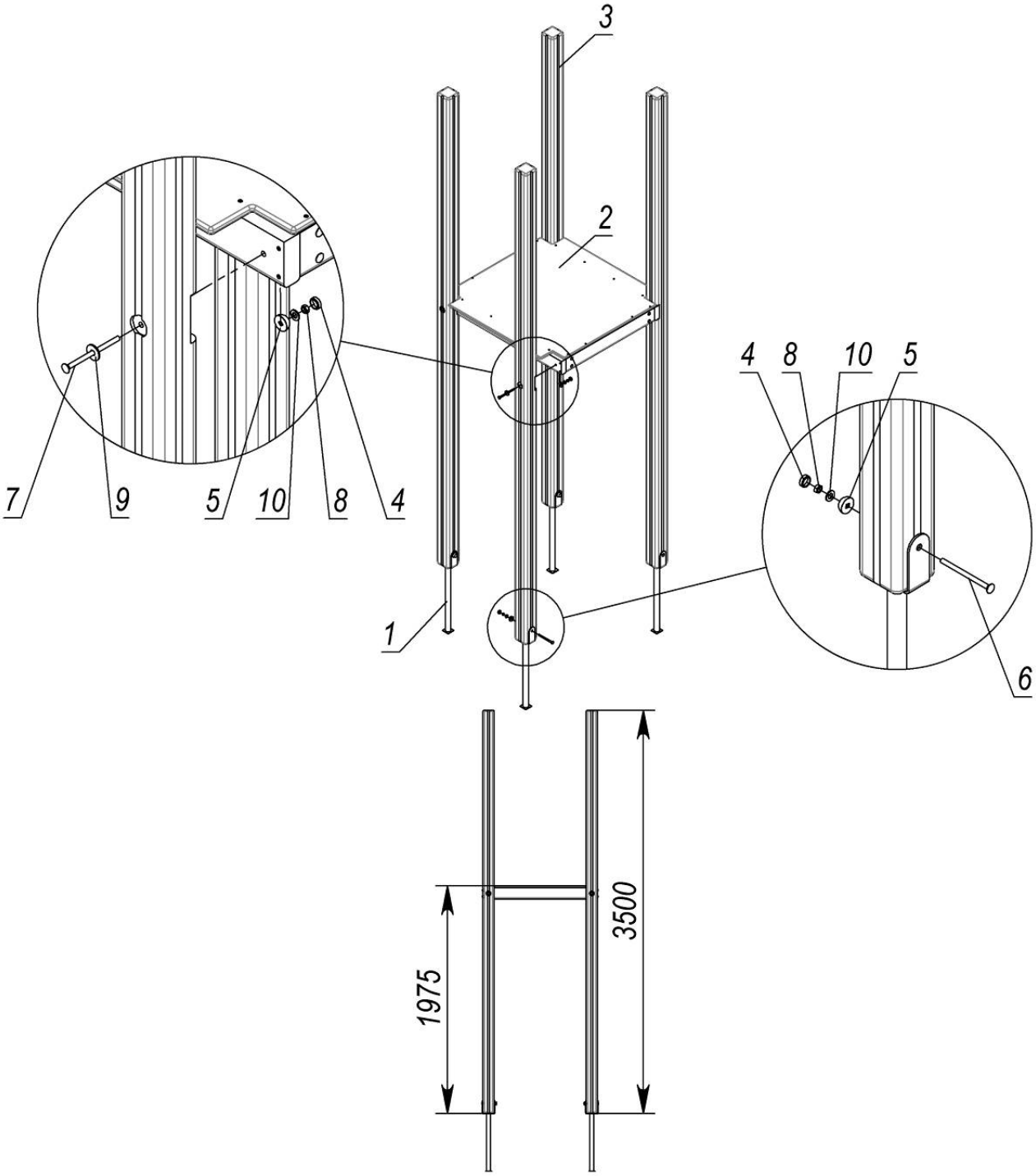

Pos.	Name	Weight, kg	Q-ty
1	Beam support	2	4
2	Site	19	1
3	Beam (3.5m)	20	4
4	Cap M8		8
5	Cup M8		8
6	Bolt M8x120 GOST7802		4
7	Bolt M8x130 GOST7802		4
8	Nut M8 GOST5915		8
9	Washer 10 GOST6958		4
10	Washer 10 GOST11371		8

Picture 8 – Completeness and tower assembly scheme 2m 1x1 (beam 3,5m). Marked under №3,4 on the picture 2

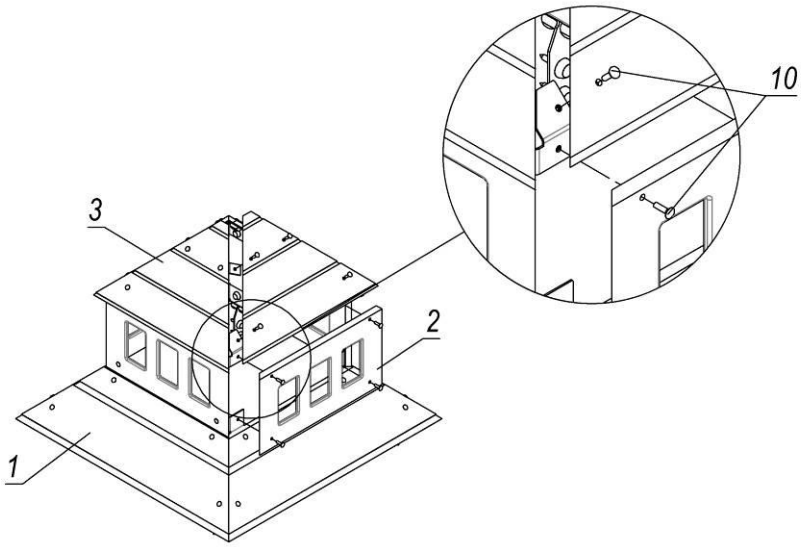
10
3
2
1

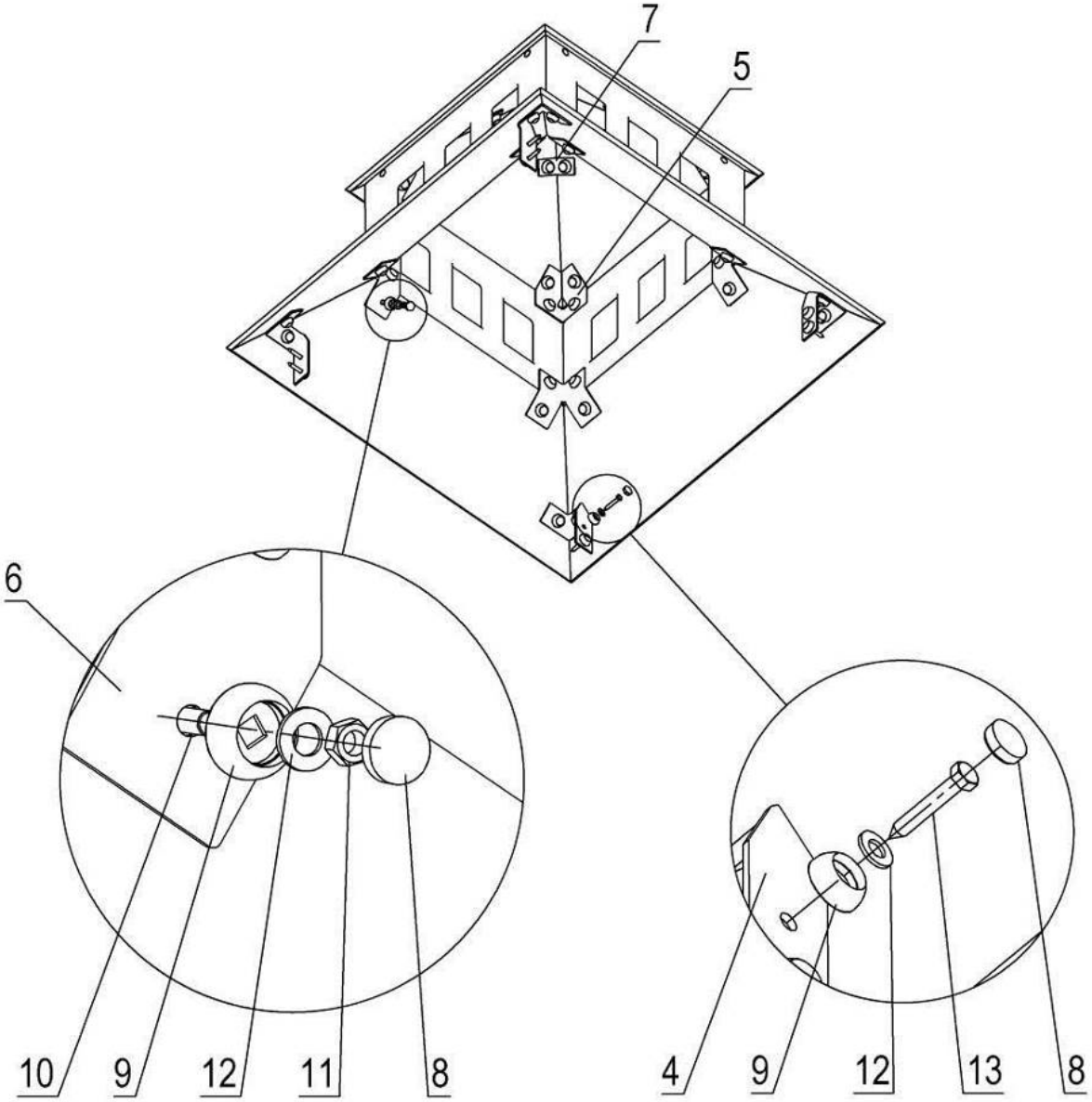

Pos.	Name	Weight, kg	Q-ty
1	Slope	3	4
2	Window	2	4
3	Small slope	2	4
4	Supporting plate		4
5	Bent plate		4
6	Bent plate		4
7	Plate		4
8	Cap M8		56
9	Cup M8		56
10	Bolt M8x30 GOST7802		48
11	Nut M8 GOST5915		48
12	Washer 10 GOST11371		56
13	Screw 8x50 GOST11473		8

Picture 9 – Assembly scheme of stepped roof

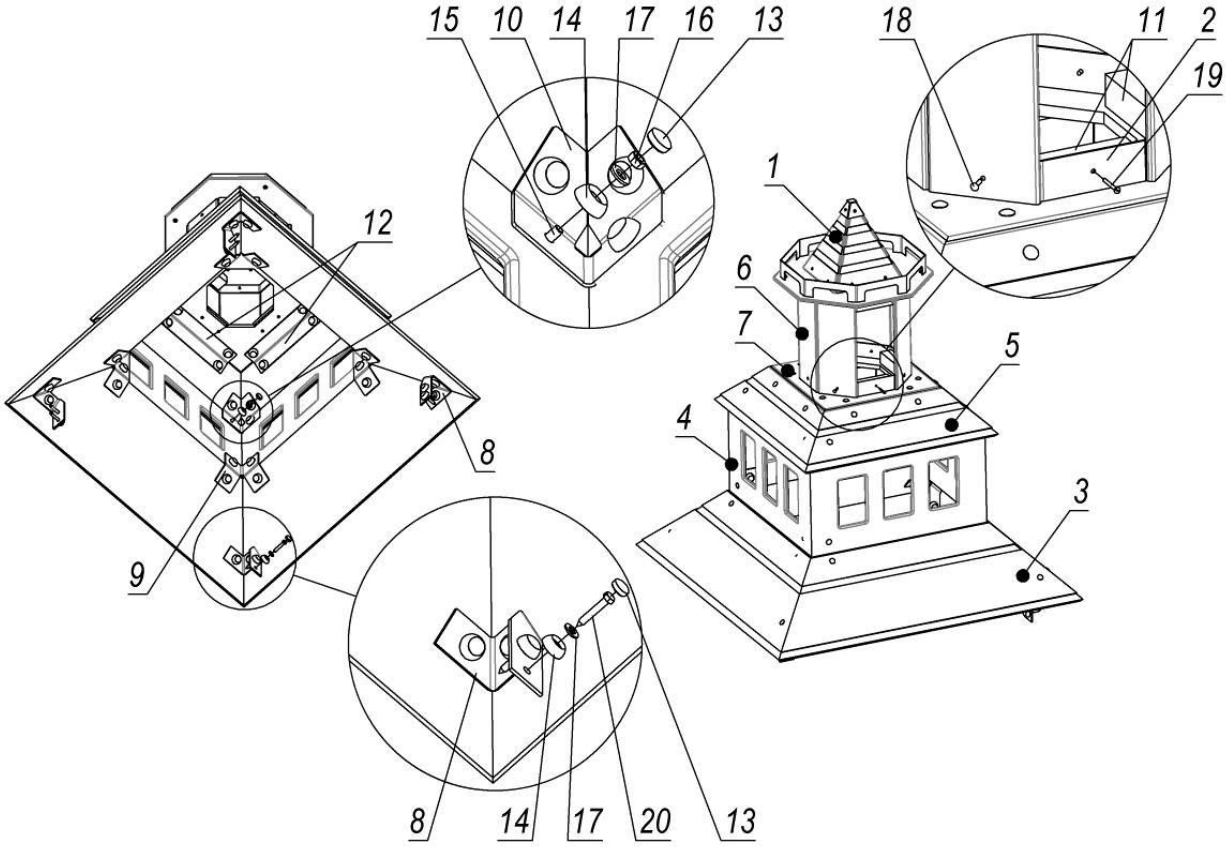

Pos.	Name	Weight, kg	Q-ty
1	Upper part of roof	4	1
2	Rim		2
3	Slope	3	4
4	Window	2	4
5	Small slope	1	4
6	Sidewall		8
7	Middle lap	1	1
8	Supporting plate		4
9	Bent plate		4
10	Bent plate		4
11	Bar		6
12	Angle bar (135 degrees)		4
13	Cap M8		64
14	Cup M8		64
15	Bolt M8x30 GOST7802		56
16	Nut M8 GOST5915		56
17	Washer 10 GOST11371		64
18	Rivet 4.8x20 DIN7337		10
19	Screw 4x40 GOST1145		16
20	Screw 8x50 GOST11473		8

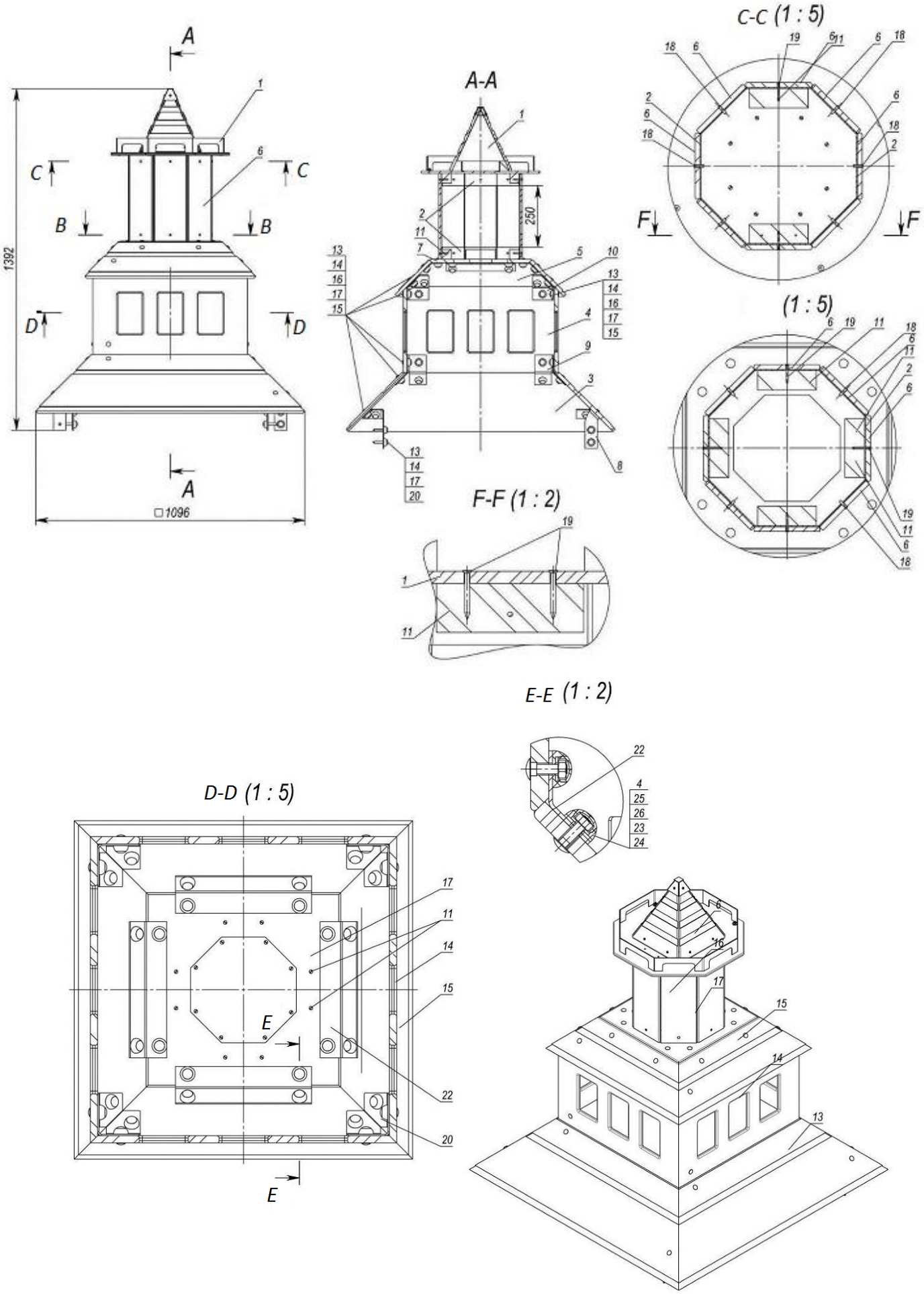

Picture 10 – Roof assembly scheme

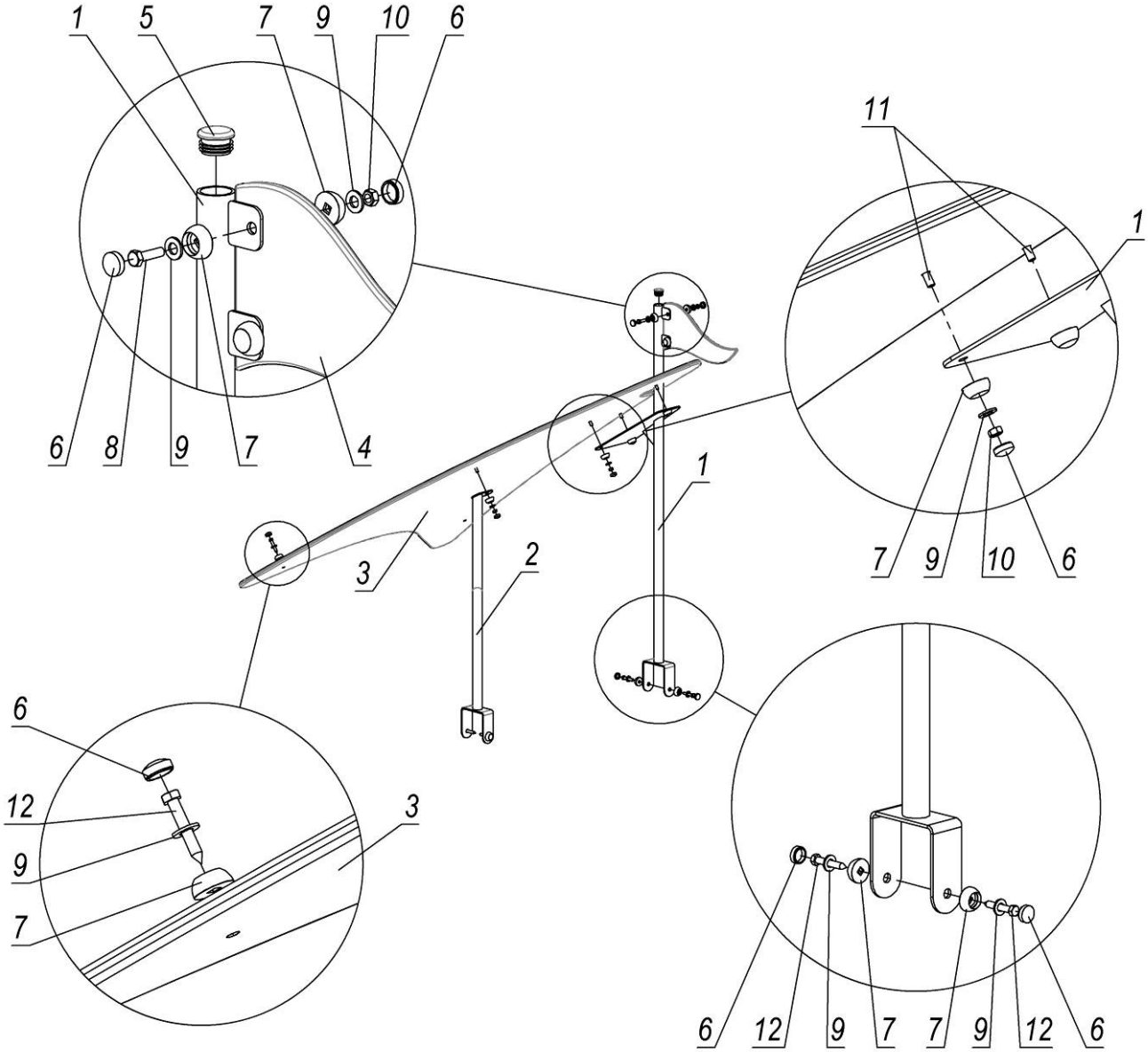

Pos.	Name	Weight, kg	Q-ty
1	Mast	5	1
2	Yacht sail support	2	1
3	Yacht sail		1
4	Flag		1
5	Plug ZO 32		1
6	Cap M8		14
7	Cup M8		14
8	Bolt M8*30 GOST7798		2
9	Washer 10 GOST11371		14
10	Nut M8 GOST5915		6
11	Bolt M8x30 GOST7802		4
12	Screw 8x50 GOST11473		6

Picture 11 – Roof assembly scheme «Yacht sail»

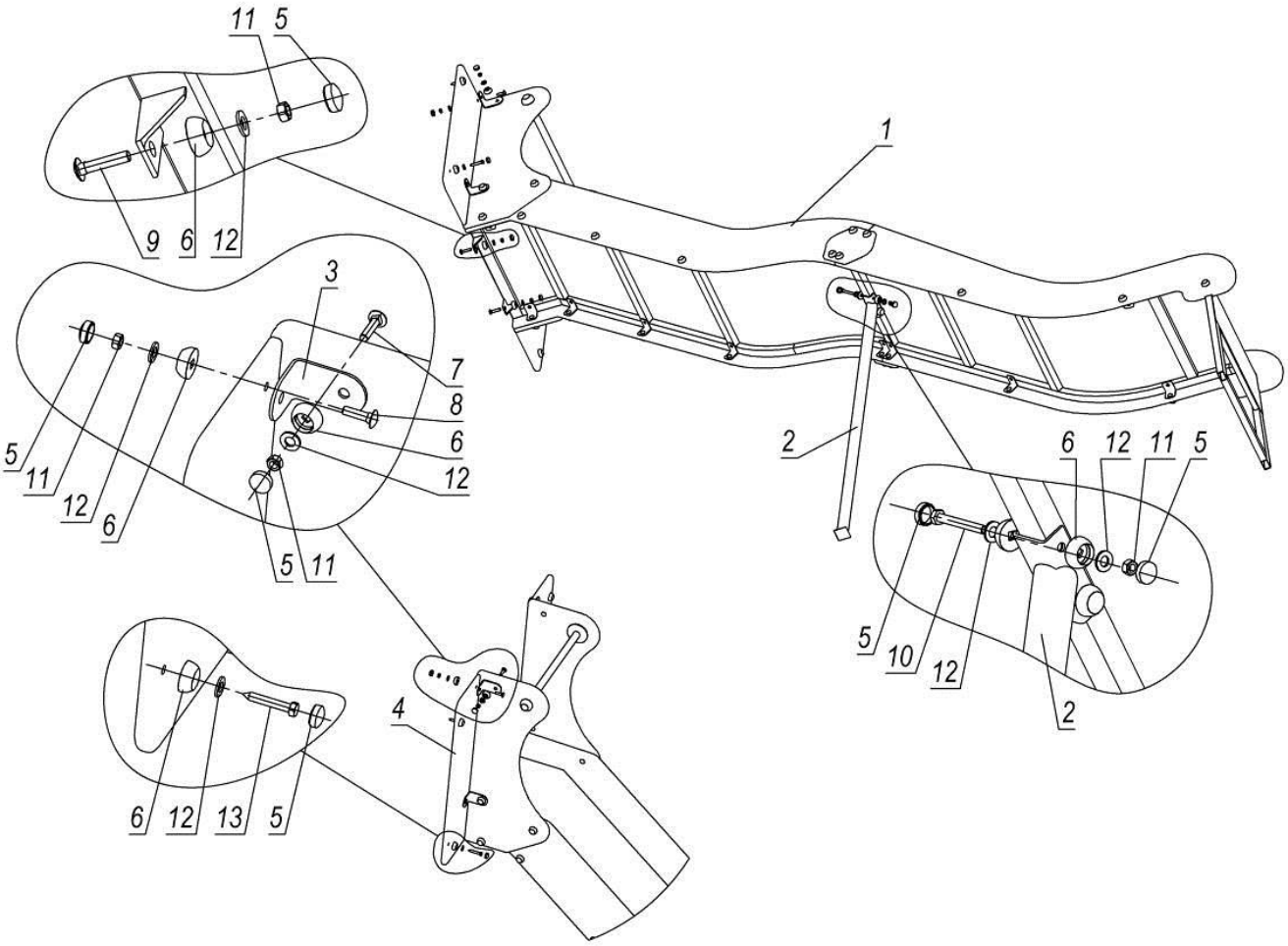

Pos.	Name	Weight, kg	Q-ty
1	Wavy slide (2m)	77	1
2	Support for 2 m slide	4	1
3	Angle bar		4
4	Fence	2	2
5	Cap M8		18
6	Cup M8		18
7	Bolt M8x35 GOST7802		4
8	Bolt M8x30 GOST7802		4
9	Bolt M8x40 GOST7802		2
10	Bolt M8x65 GOST7798		2
11	Nut M8 GOST5915		12
12	Washer 10 GOST11371		18
13	Screw 8x50 GOST11473		4

Picture 12 – Slide assembly scheme 2m

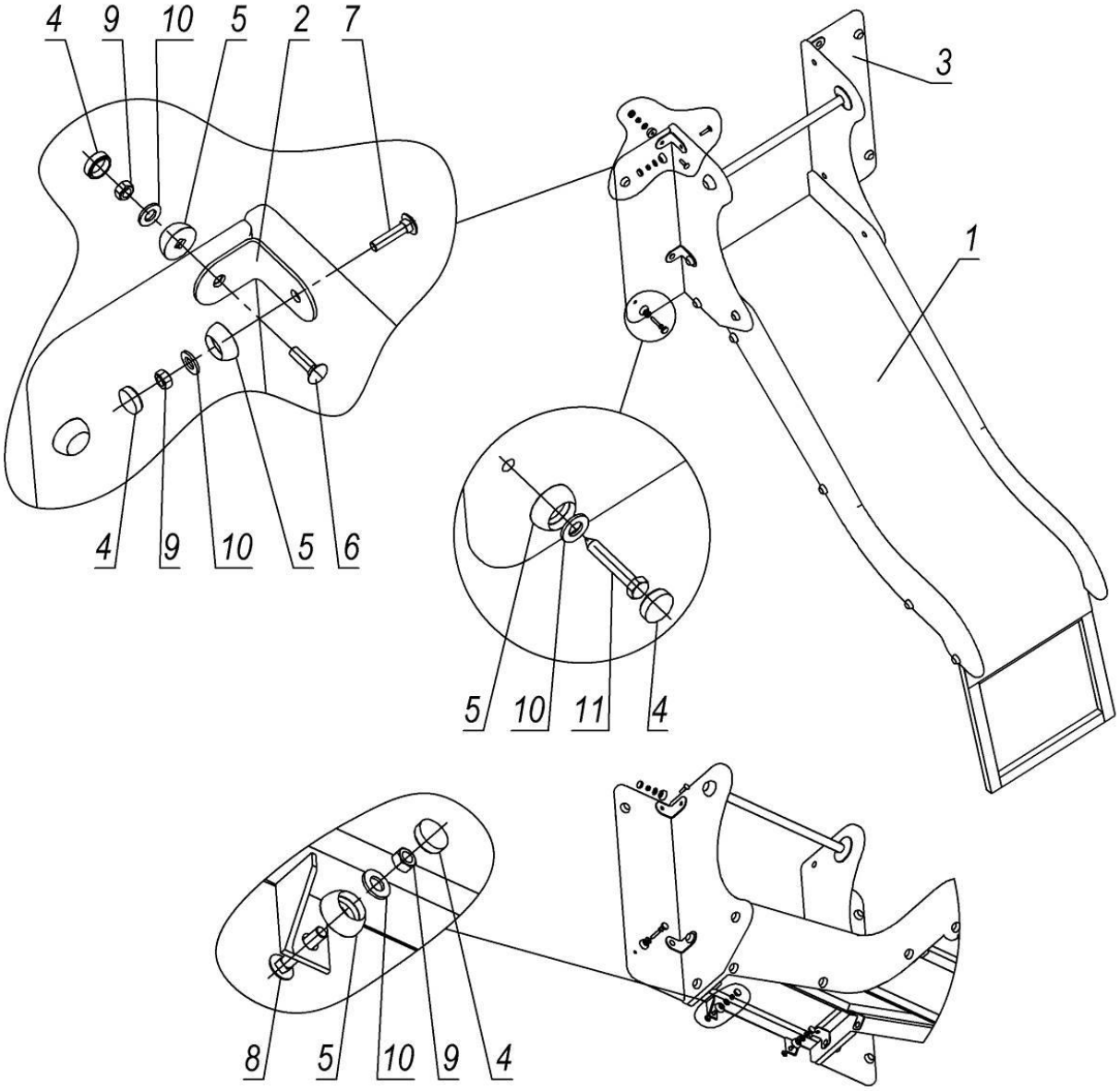

Pos.	Name	Weight, kg	Q-ty
1	Slide 700 mm	38	1
2	Angle bar		4
3	Fence	2	2
4	Cap M8		14
5	Cup M8		14
6	Bolt M8x30 GOST7802		4
7	Bolt M8x35 GOST7802		4
8	Bolt M8x40 GOST7802		2
9	Nut M8 GOST5915		10
10	Washer 10 GOST11371		14
11	Screw 8x50 GOST11473		4

Picture 13 - Slide assembly scheme 700mm

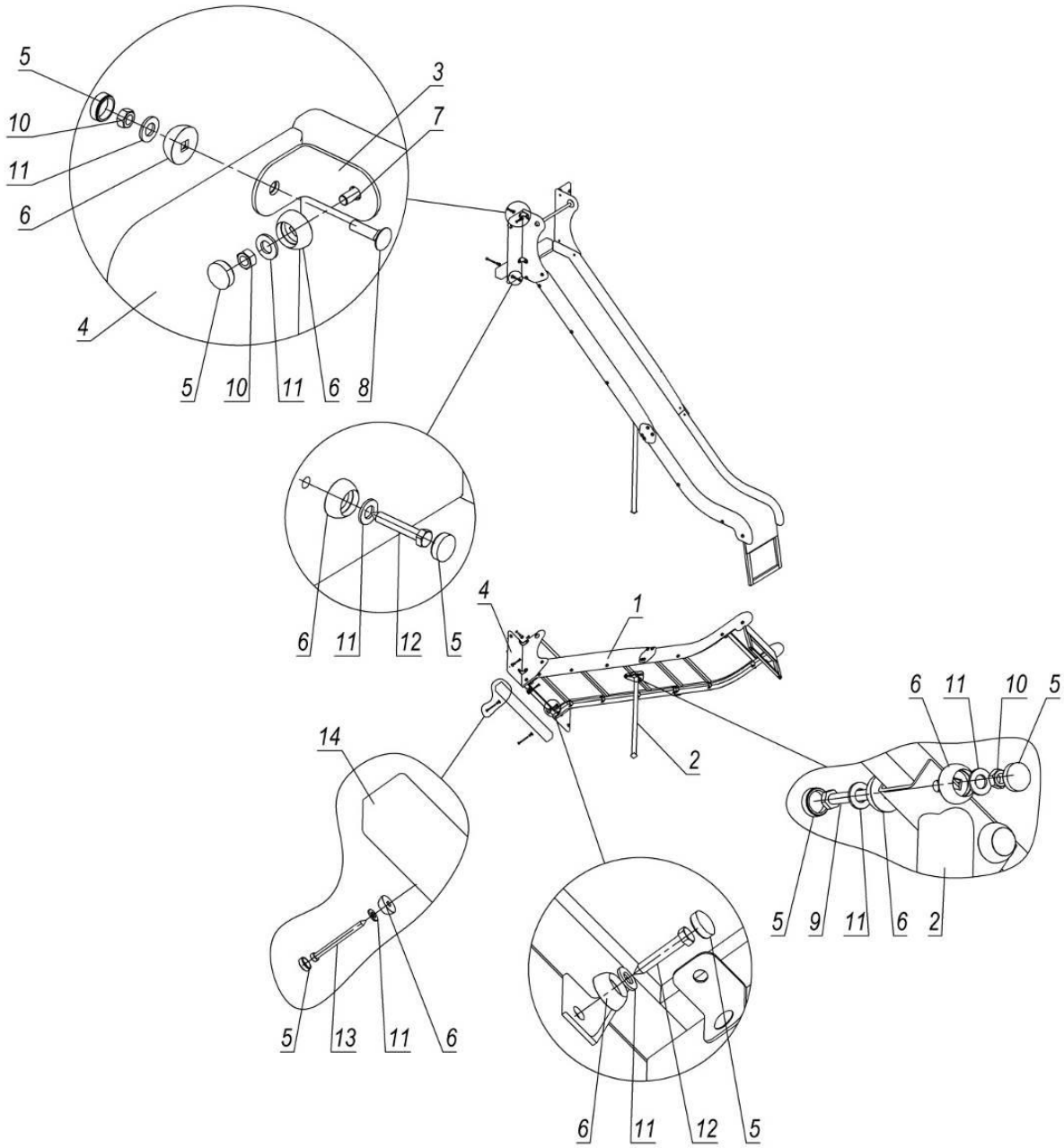

Pos.	Name	Weight, kg	Q-ty
1	Straight slide (2m)	73	1
2	Support for 2m slide	4	1
3	Angle bar		4
4	Fence	2	2
5	Cap M8		20
6	Cup M8		20
7	Bolt M8x35 GOST7802		4
8	Bolt M8x30 GOST7802		4
9	Bolt M8x65 GOST7798		2
10	Nut M8 GOST5915		10
11	Washer 10 GOST11371		20
12	Screw 8x50 GOST11473		6
13	Screw 8x100 GOST11473		2
14	Beam	2	1

Picture 14 - Slide assembly scheme 2m

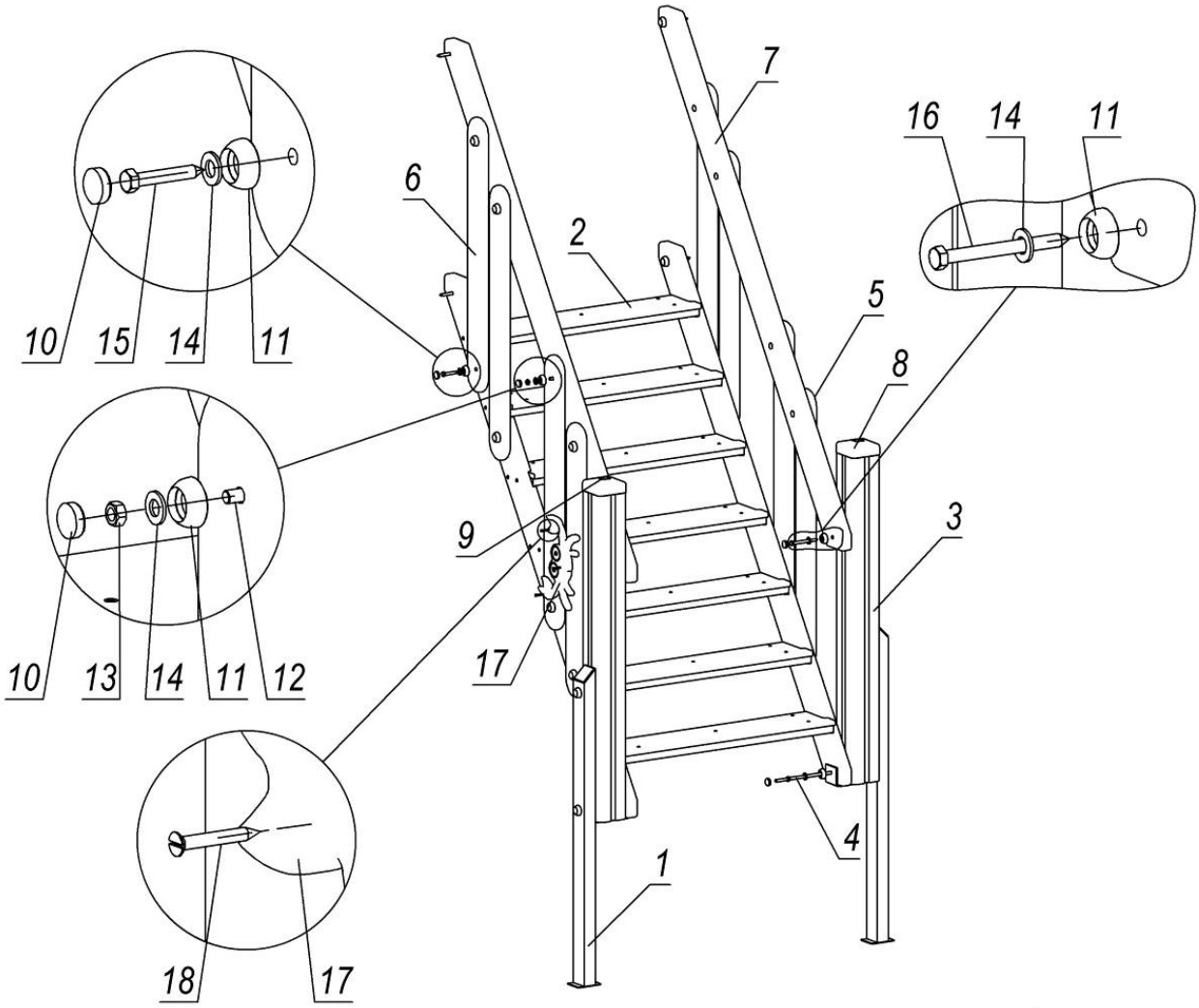

Pos.	Name	Weight, kg	Q-ty
1	Rack	4	2
2	Stairs	27	1
3	Support	6	2
4	Sprig L=210mm		2
5	Cover plate		4
6	Cover plate		4
7	Handrail	4	2
8	Cap		2
9	Cap		2
10	Cap M8		28
11	Cup M8		28
12	Bolt M8x65 GOST7802		8
13	Nut M8 GOST5915		12
14	Washer 10 GOST11371		30
15	Screw 8x50 GOST11473		10
16	Screw 8x90 GOST11473		8
17	Cover plate crab	230	2
18	Screw 4x30 GOST1145		6

Picture 15 – Completeness and assembly scheme of stairs 1,5m

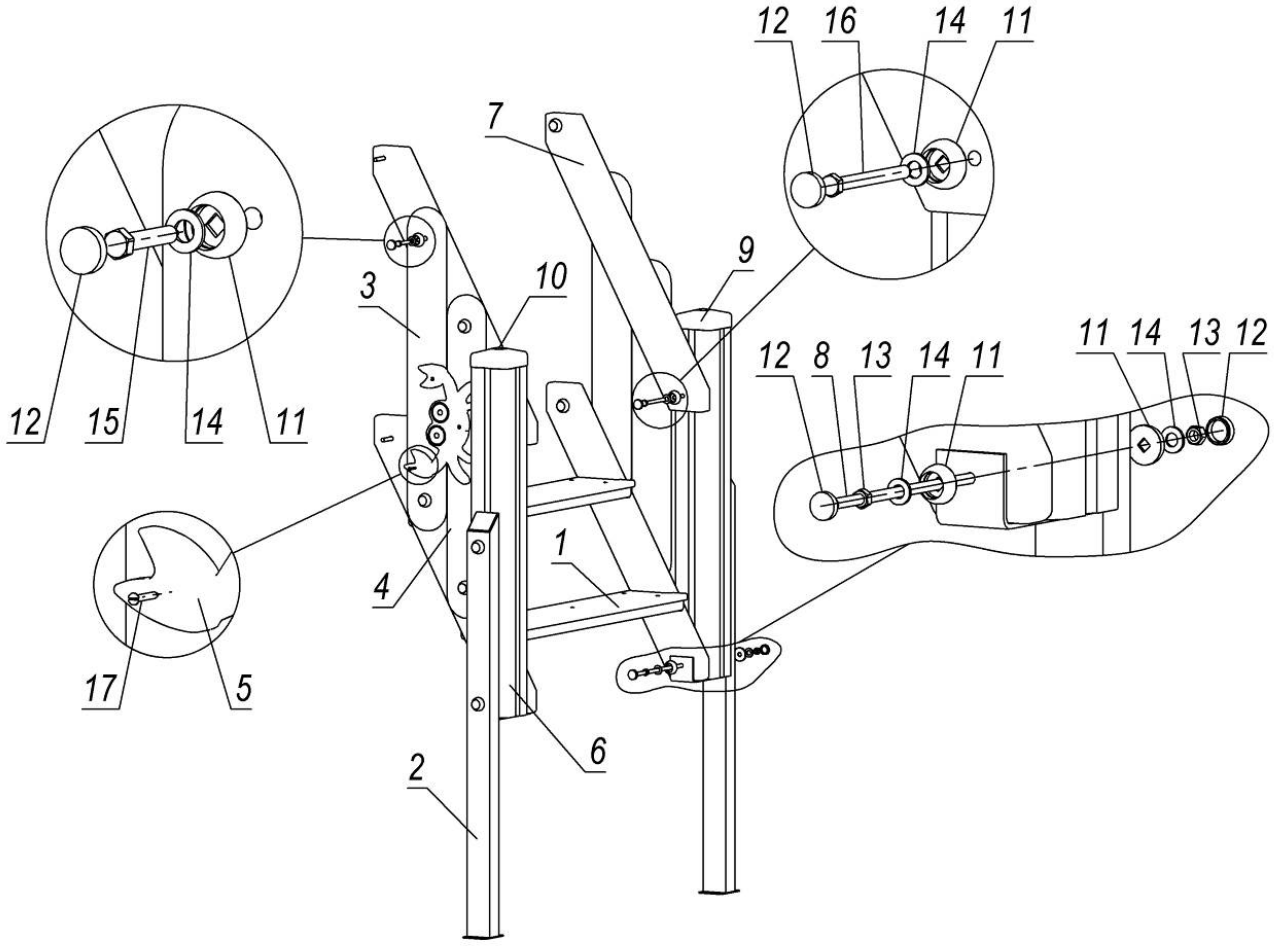

Pos.	Name	Weight, kg	Q-ty
1	Ladder 2 steps	9	1
2	Rack	4	2
3	Cover plate		2
4	Cover plate		2
5	Cover plate crab	230	2
6	Pillar	3	2
7	Railings	2	2
8	Sprig L=210mm		2
9	Cap		2
10	Cap		2
11	Cup M8		20
12	Cap M8		20
13	Nut M8 GOST5915		4
14	Washer 10 GOST11371		22
15	Screw 8x50 GOST11473		10
16	Screw 8x90 GOST11473		8
17	Screw 4x30 GOST1145		6

Picture 16 - Assembly scheme of stairs

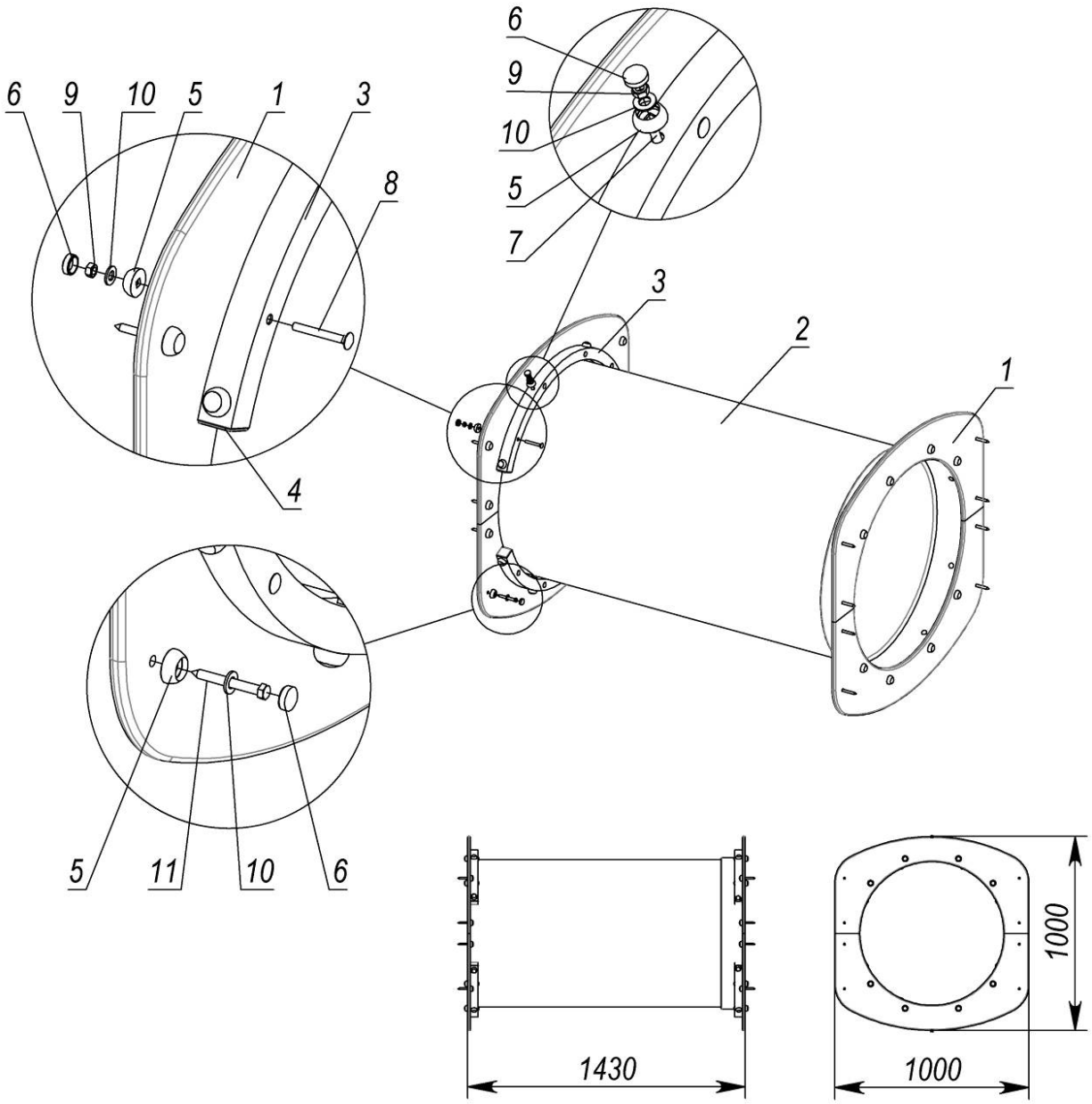

Pos.	Name	Weight, kg	Q-ty
1	Entrance	3	4
2	Straight pipe 760	30	1
3	Bent pipe	2	4
4	Plug 40x40		8
5	Cup M8		48
6	Cap M8		48
7	Bolt M8x60 GOST7802		16
8	Bolt M8x65 GOST7802		16
9	Nut M8 GOST5915		32
10	Washer 10 GOST11371		48
11	Screw 8x70 GOST11473		16

Picture 17 – Assembly scheme of pipe crossing

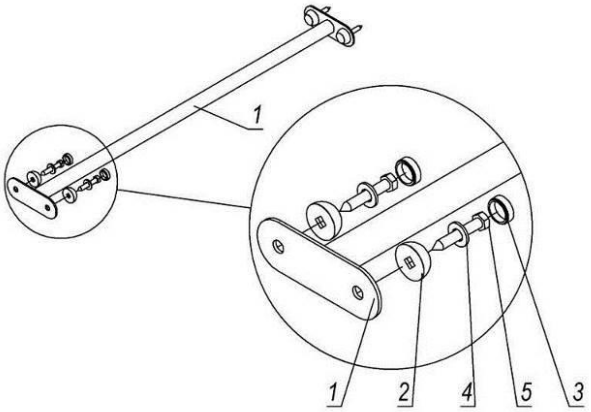

Pos.	Name	Weight, kg	Q-ty
1	Brace rod 0.8 m	1	1
2	Cup M8		4
3	Cap M8		4
4	Washer 10 GOST11371		4
5	Screw 8x50 GOST11473		4

Picture 18 – Assembly scheme of brace rod

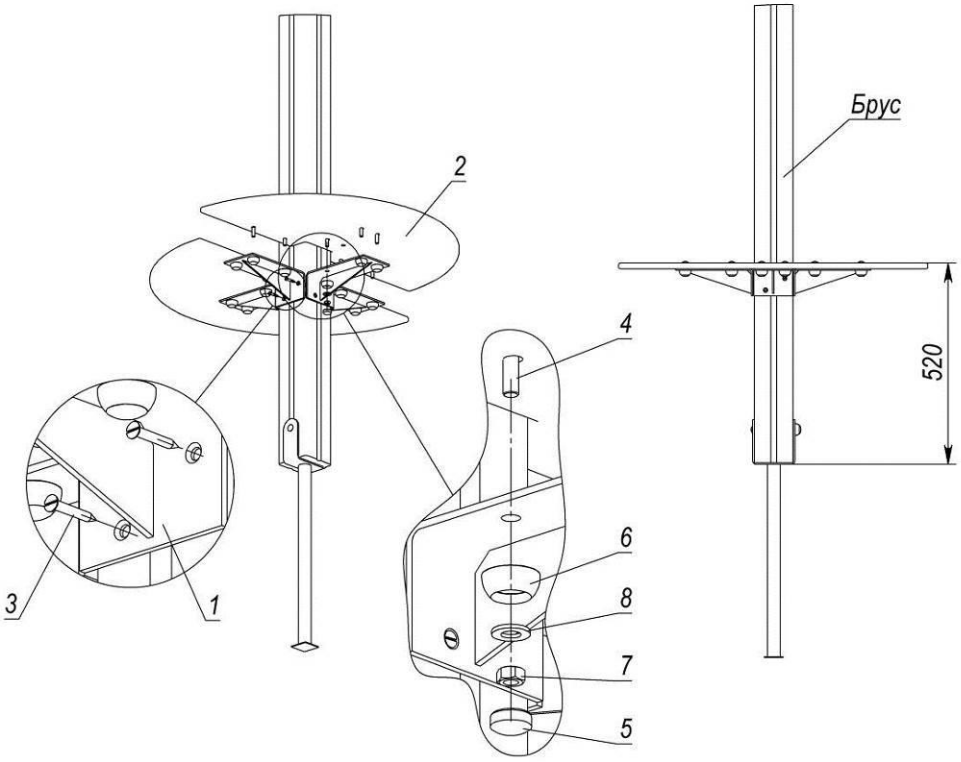

Pos.	Name	Weight, kg	Q-ty
1	Table frame		4
2	Table section	2	2
3	Screw 5x35 GOST1145		8
4	Bolt M8x30 GOST7802		16
5	Cap M8		16
6	Cup M8		16
7	Nut M8 GOST5915		16
8	Washer 10 GOST11371		16

Picture 19 – Table assembly scheme

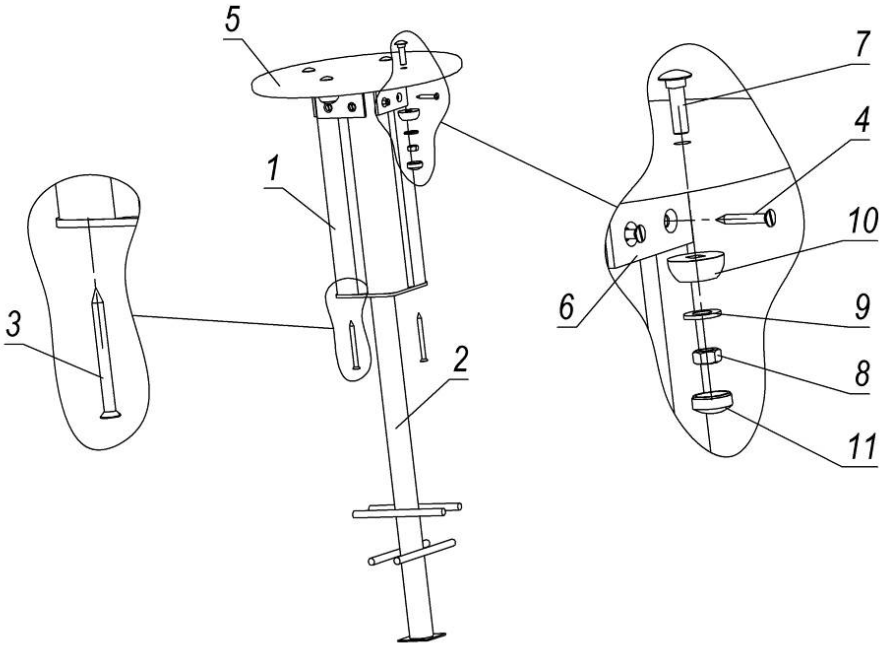

Pos.	Name	Weight, kg	Q-ty
1	Beam MN№1, L=300mm	2	1
2	Support	2	1
3	Screw 6x70 GOST1145		2
4	Screw 5x35 GOST1145		8
5	Bench seat		1
6	Big angle bar		4
7	Bolt M8x30 GOST7802		4
8	Nut M8 GOST5915		4
9	Washer 10 GOST11371		4
10	Cup M8		4
11	Cap M8		4

Picture 20 – Assembly scheme of bench seat

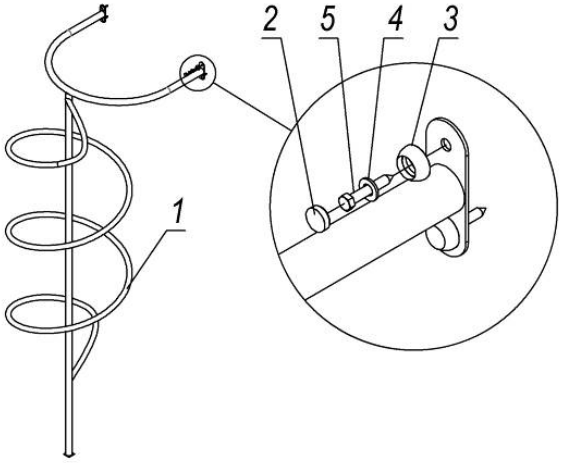

Pos.	Name	Weight, kg	Q-ty
1	Spiral ladder	32	1
2	Cap M8		4
3	Cup M8		4
4	Washer 10 GOST11371		4
5	Screw 8x50 GOST11473		4

Picture 20.1 – Assembly scheme of spiral ladder

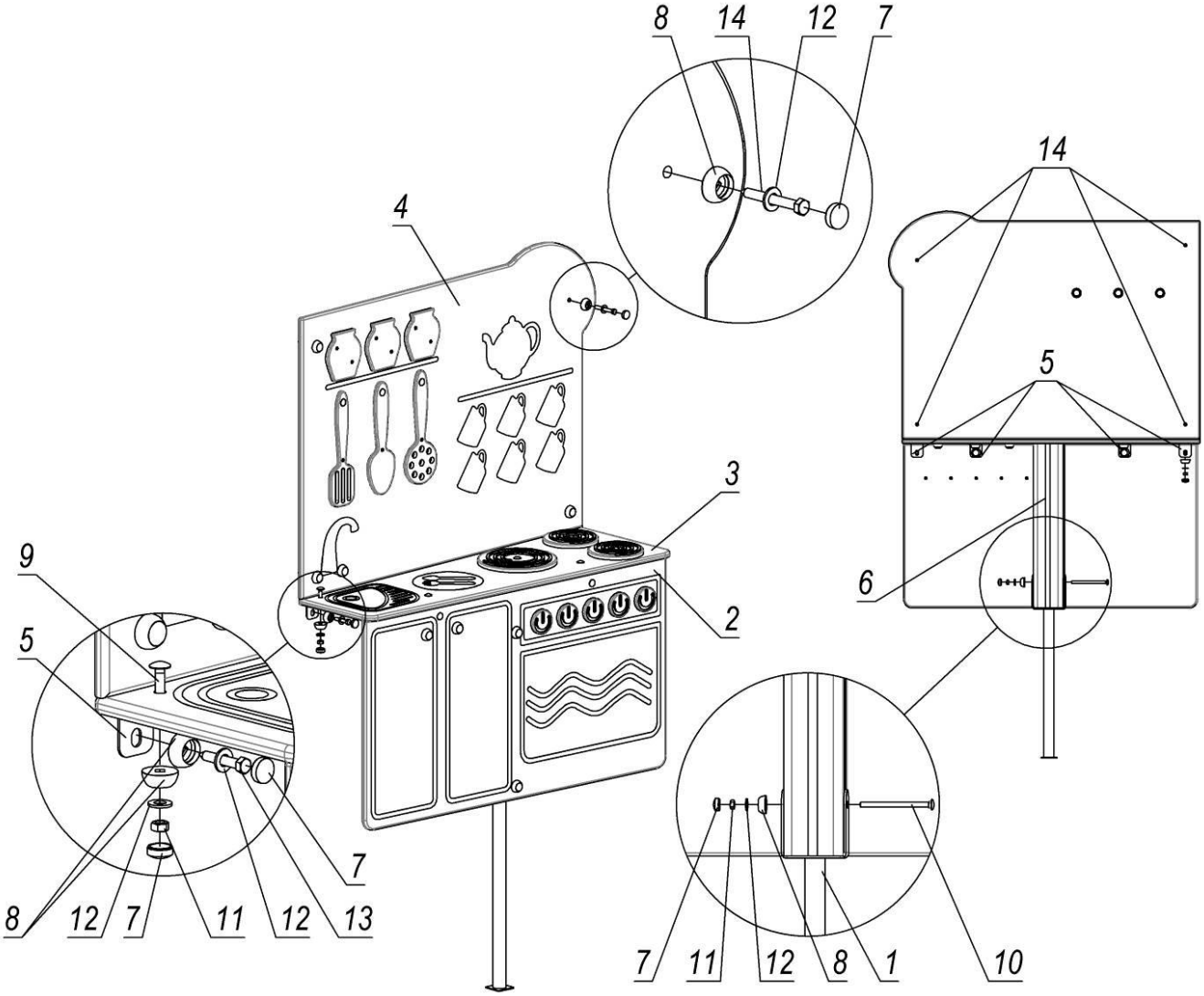

Pos.	Name	Weight, kg	Q-ty
1	Beam support	2	1
2	Kitchen stove	6	1
3	Table with burners	4	1
4	Kitchen cabinet assembly	9	1
5	Small angle bar		4
6	Pillar	3	1
7	Cap M8		15
8	Cup M8		15
9	Bolt M8x30 GOST7802		6
10	Bolt M8x120 GOST7802		1
11	Nut M8 GOST5915		7
12	Washer 10 GOST11371		15
13	Screw 8x50 GOST11473		2
14	Screw 8x70 GOST11473		6

Picture 21 – Kitchen assembly scheme

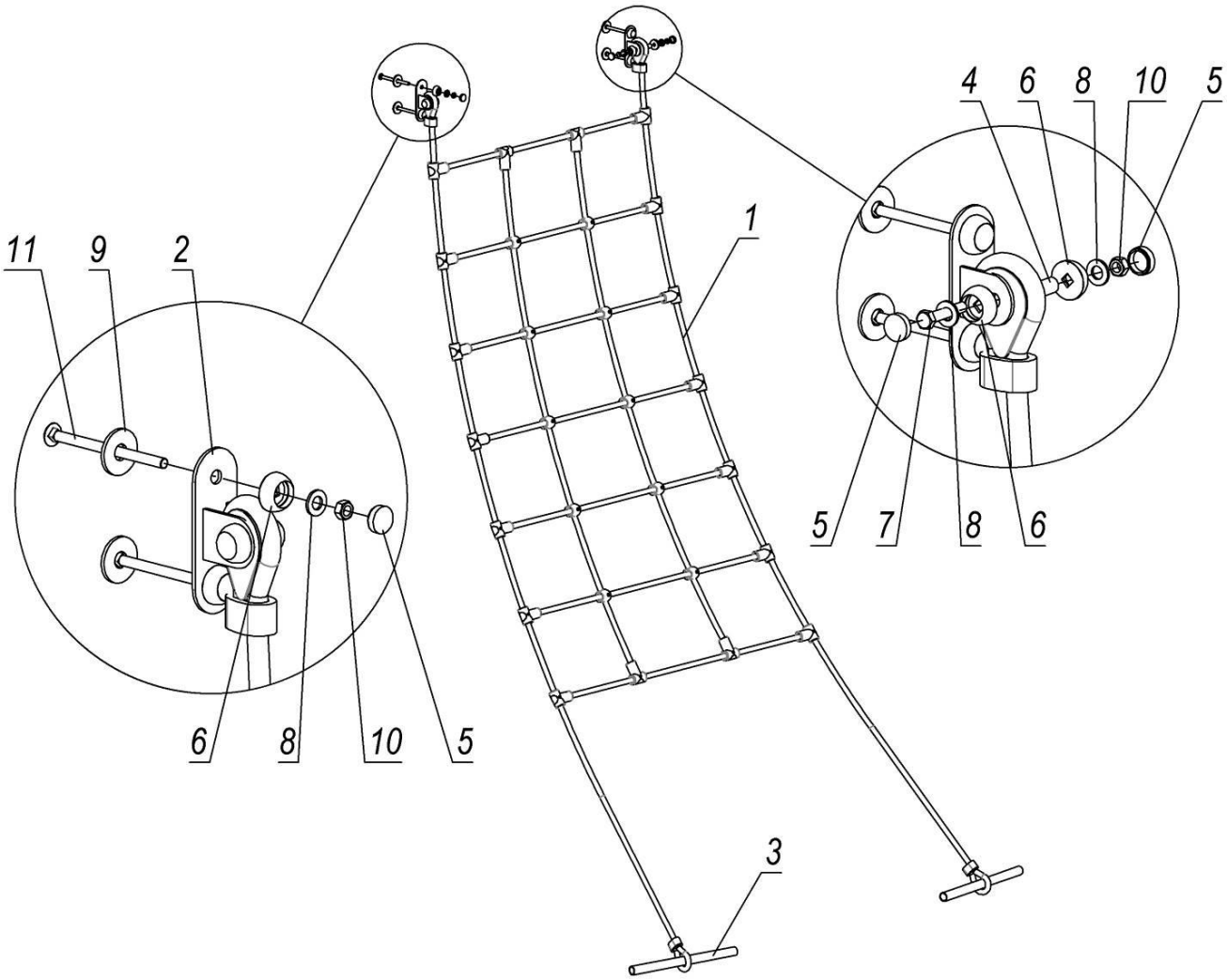

Pos.	Name	Weight, kg	Q-ty
1	Rope ladder	6	1
2	Rope bracket		2
3	Tube 27x2 L=390 mm GOST10704		2
4	Tube		2
5	Cap M8		8
6	Cup M8		8
7	Bolt M8*45 GOST7798		2
8	Washer 10 GOST11371		8
9	Washer 12 GOST6958		4
10	Nut M8 GOST5915		6
11	Bolt M8x120 GOST7802		4

Picture 22 – Assembly scheme of rope ladder

Procedure for assembling the "Cash desk"

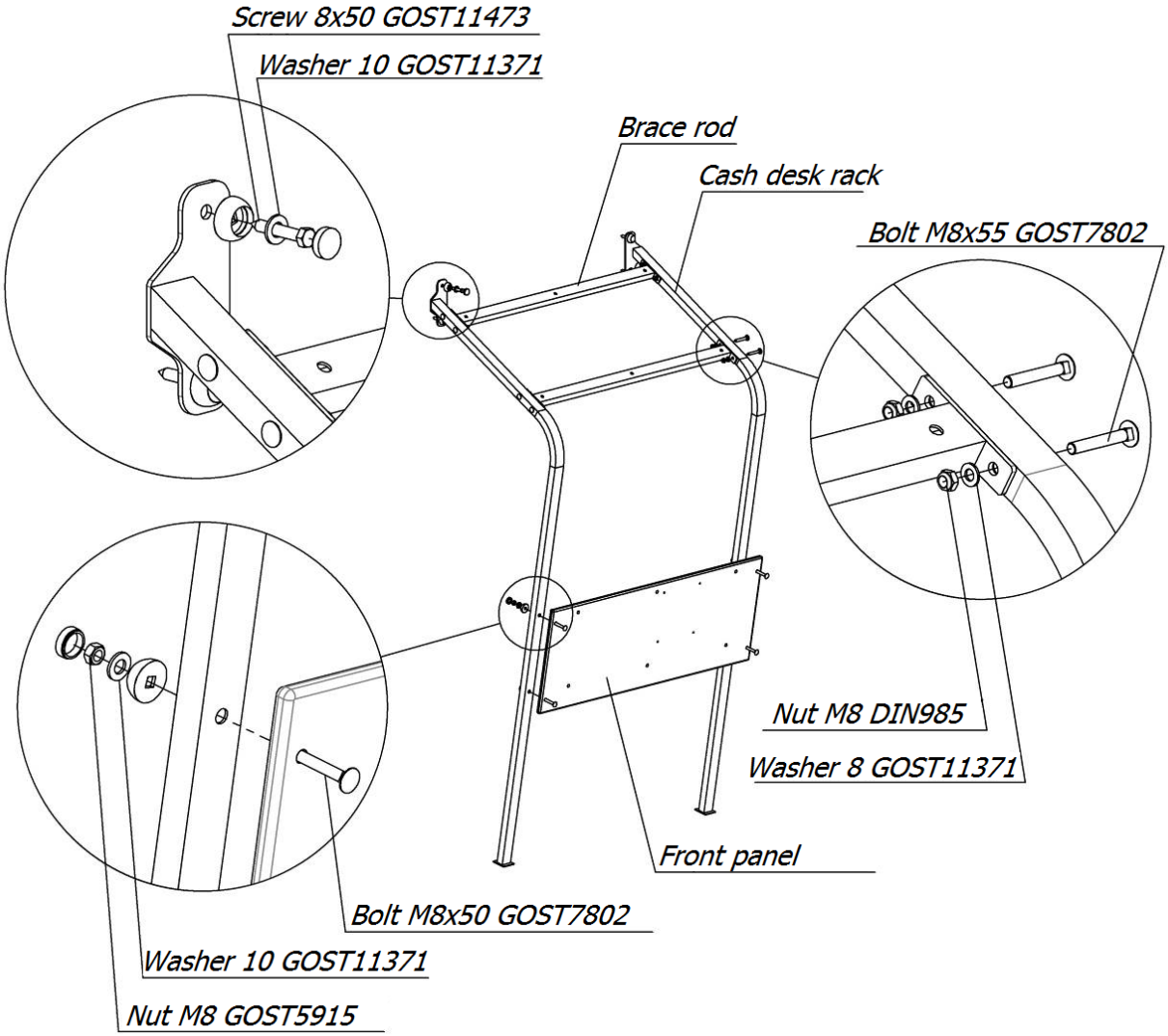

Picture 23 – Fasten front panel and brace rod to the rack

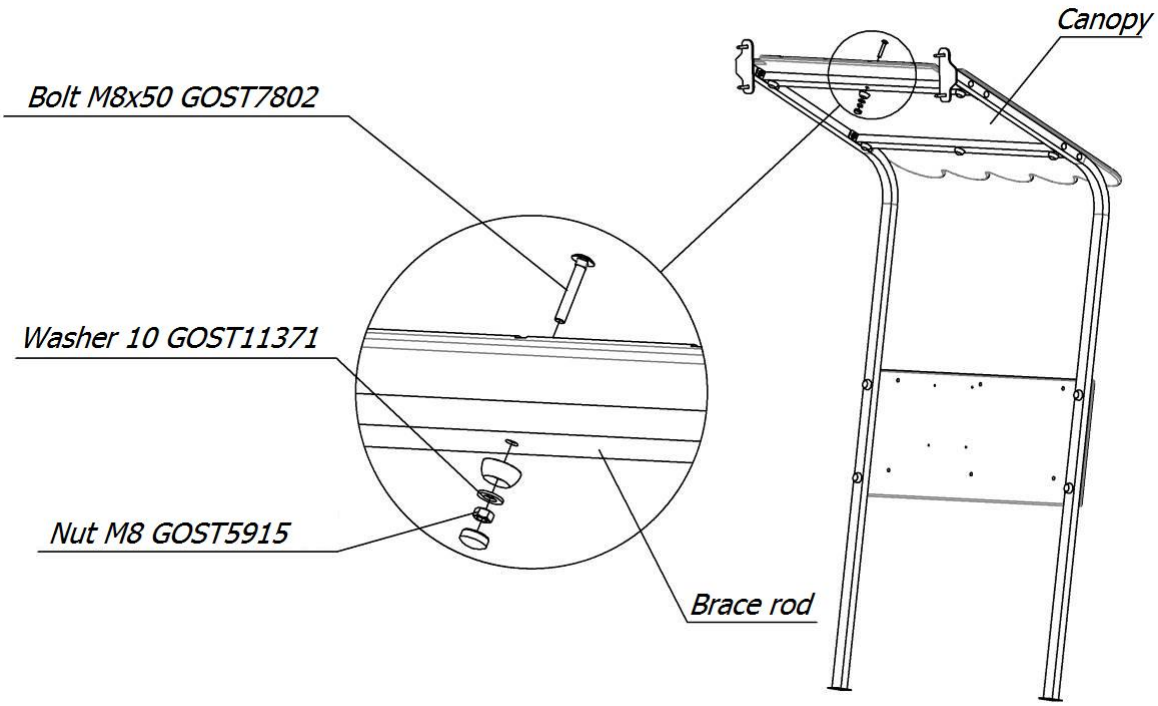

Picture 24 – Fastening scheme of canopy

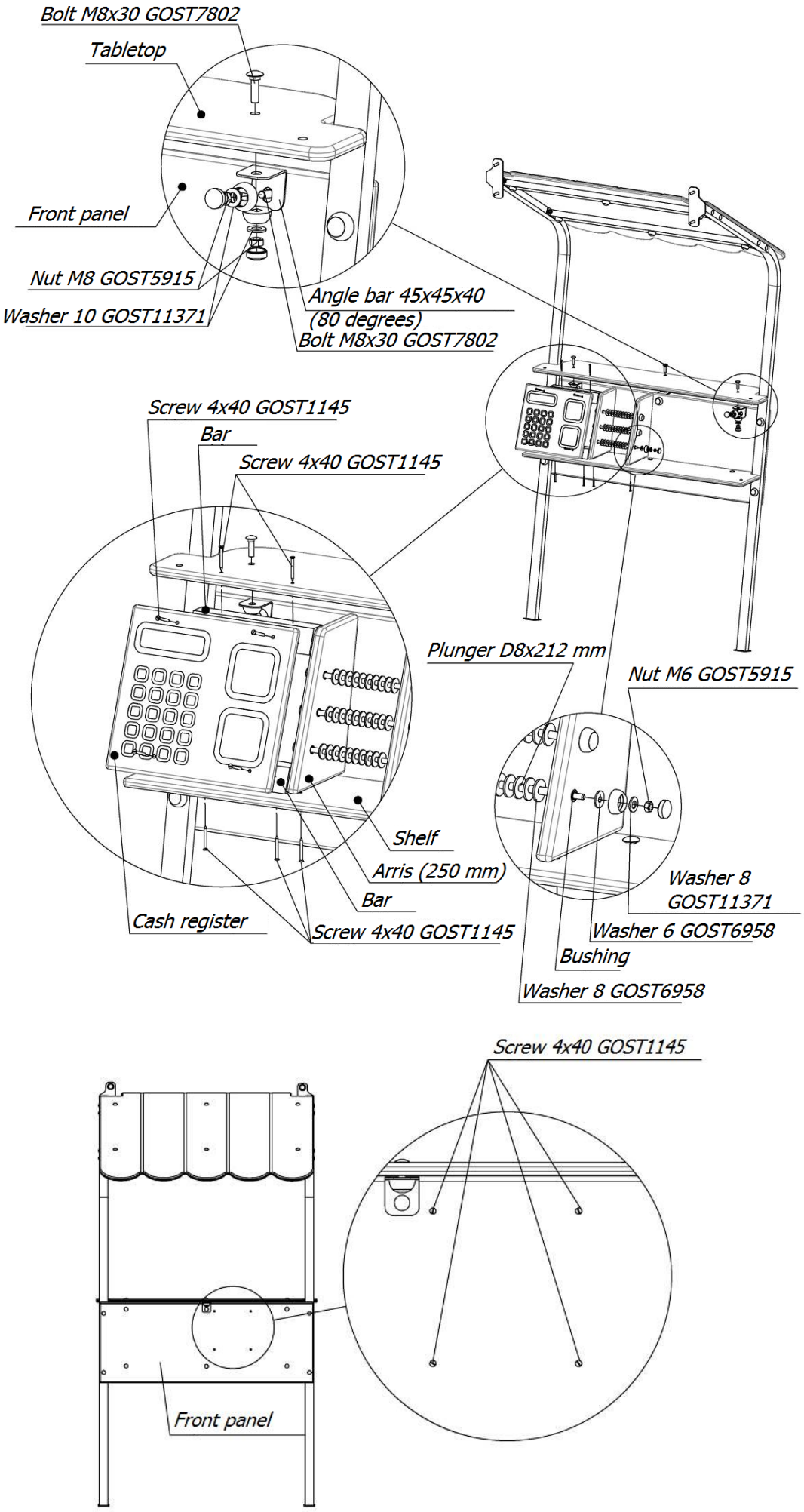

Picture 25 – Assembly scheme of cash register

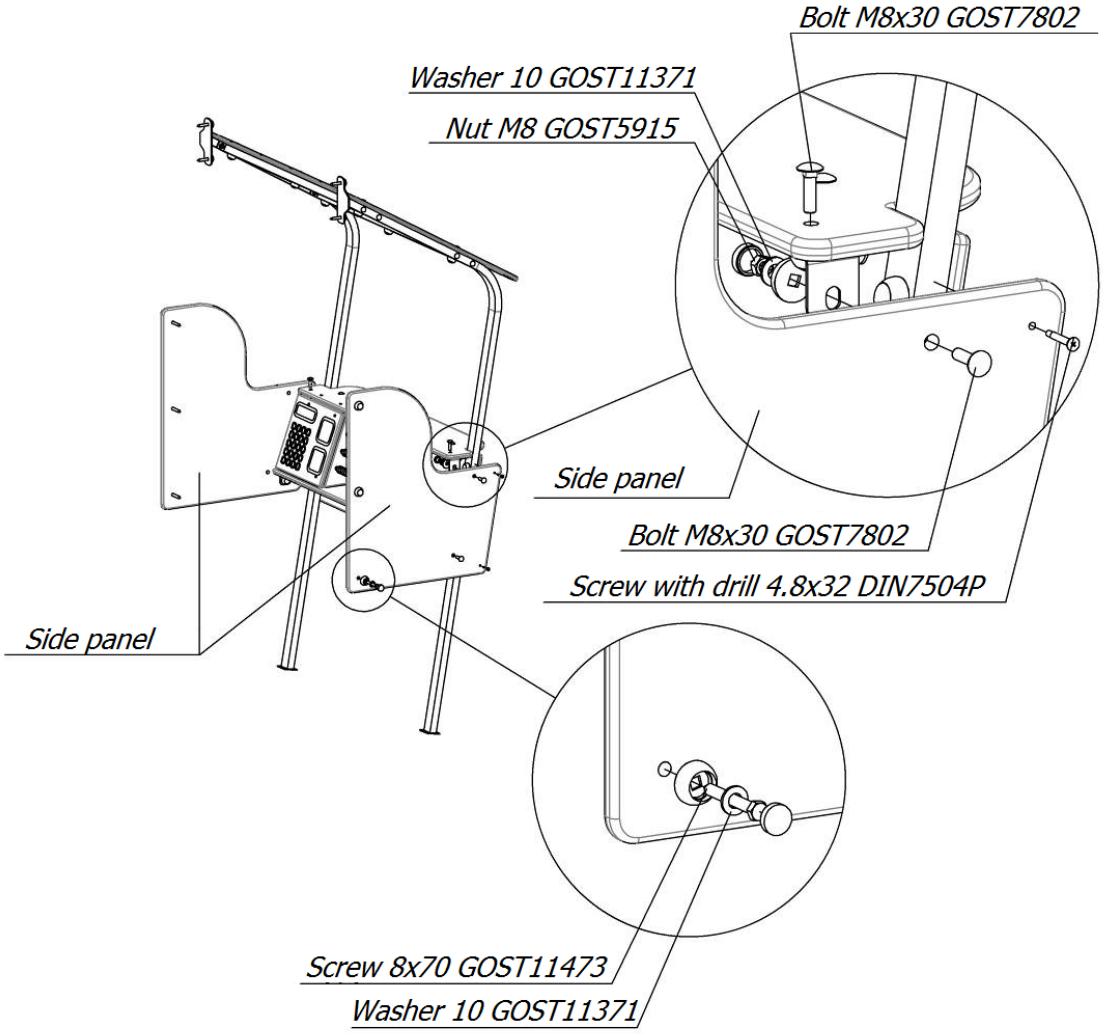

Picture 26 – Panel fastening scheme

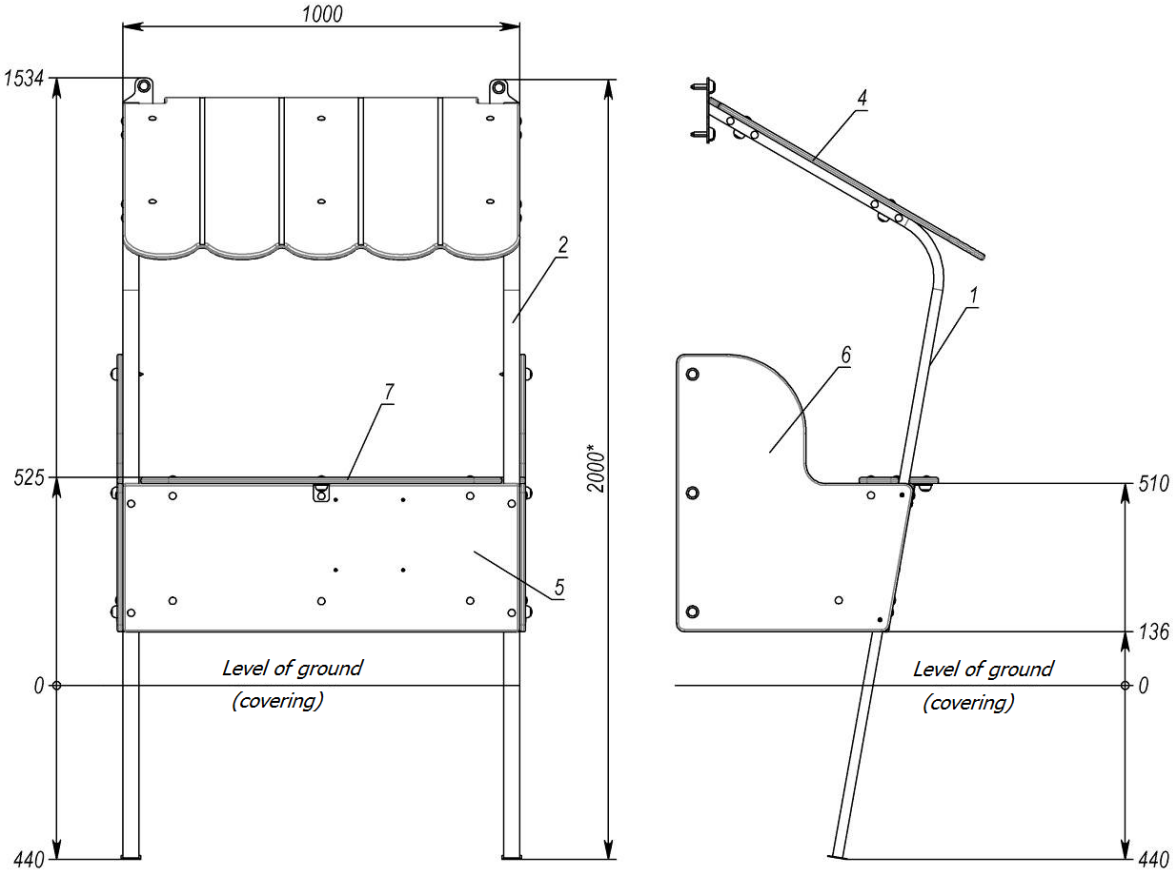

Picture 27 – Overall dimensions

Table 1 – Completeness of «Cash desk»

Pos.	Name	Weight, kg	Q-ty
1	Cash register	5	1
2	Cash register	5	1
3	Brace rod (920mm)	2	2
4	Canopy	7	1
5	Front panel	4	1
6	Side panel	3	2
7	Tabletop	2	1
8	Shelf (1m)	2	1
9	Arris (250mm)		2
10	Cash desk		1
11	Bar		2
12	Plunger D8x212mm		3
13	Bushing		6
14	Small angle		4
15	Small angle bar		5
16	Plate		1
17	Cup M6		6
18	Cap M8		6
19	Nut M6 GOST5915		6
20	Nut M8 GOST5915		30
21	Washer 8 GOST11371		14
22	Washer 6 GOST6958		6
23	Washer 8 GOST6958		30
24	Washer 10 GOST11371		40
25	Bolt M8x30 GOST7802		20
26	Bolt M8x50 GOST7802		10
27	Bolt M8x55 GOST7802		8
28	Self-locking nut M8 DIN985		8
29	Cup M8		40
30	Cap M8		40
31	Screw 8x70 GOST11473		6
32	Screw 8x50 GOST11473		4
33	Screw with drill 4.8x32 DIN7504P	5	4
34	Screw 4x40 GOST1145		14

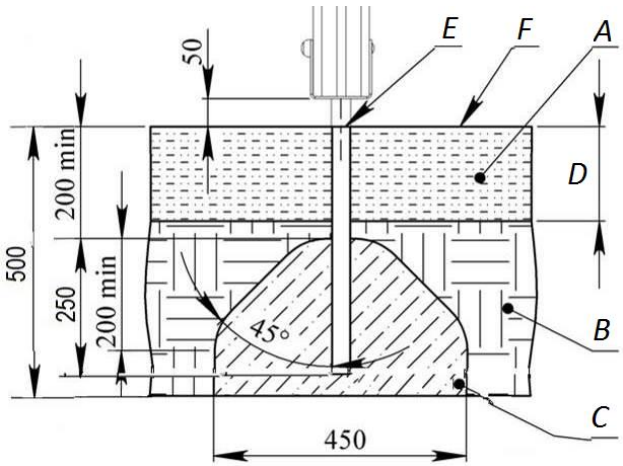

For beams supports and other elements

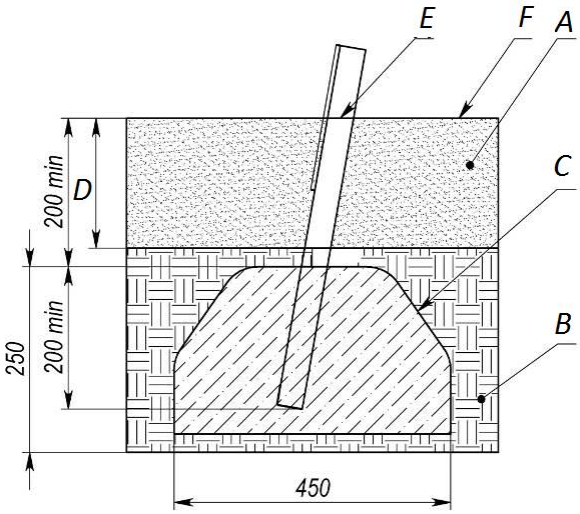

for slides of the complex

A - shock-absorbing coating;
B – soil;
C – concrete;
D- depth of the shock absorbing coating;
E - product level plane;
F – game surface.

Examples of impact-absorbing coatings

Material[1]	Description	Minimal depth, mm	Fall height, mm
Turf			≤ 1000
Tree bark	grain size 20-80 mm	200	≤ 2000
		300	≤ 3000
Sawdust	grain size 5-30 mm	200	≤ 2000
		300	≤ 3000
Sand[2]	grain size 0.2-2 mm	200	≤ 2000
		300	≤ 3000
Gravel[2]	grain size 2-8 mm	200	≤ 2000
		300	≤ 3000
Another material	HIC tested according to EN 1177	According to the test	According to the test

1. Materials are specially made for the playgrounds.
2. No clay inclusions should be present. Grain size is obtained by sieving through a sieve as in EN 933-1.

Picture 28 – Concreting scheme

Module of «Yacht»

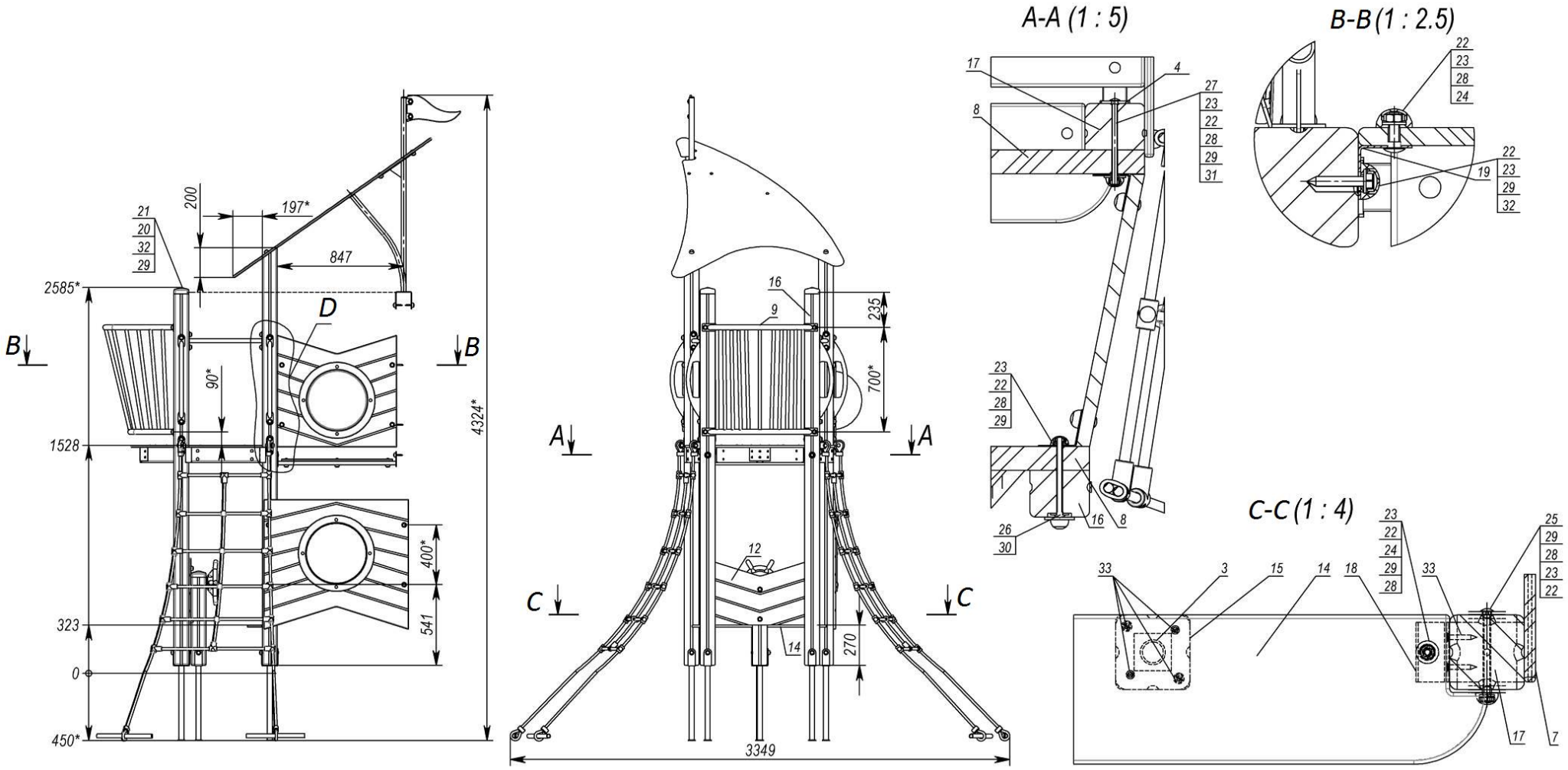

Picture 29

Not mentioned elements of fastening to the beams pos. 22,23,29,32.

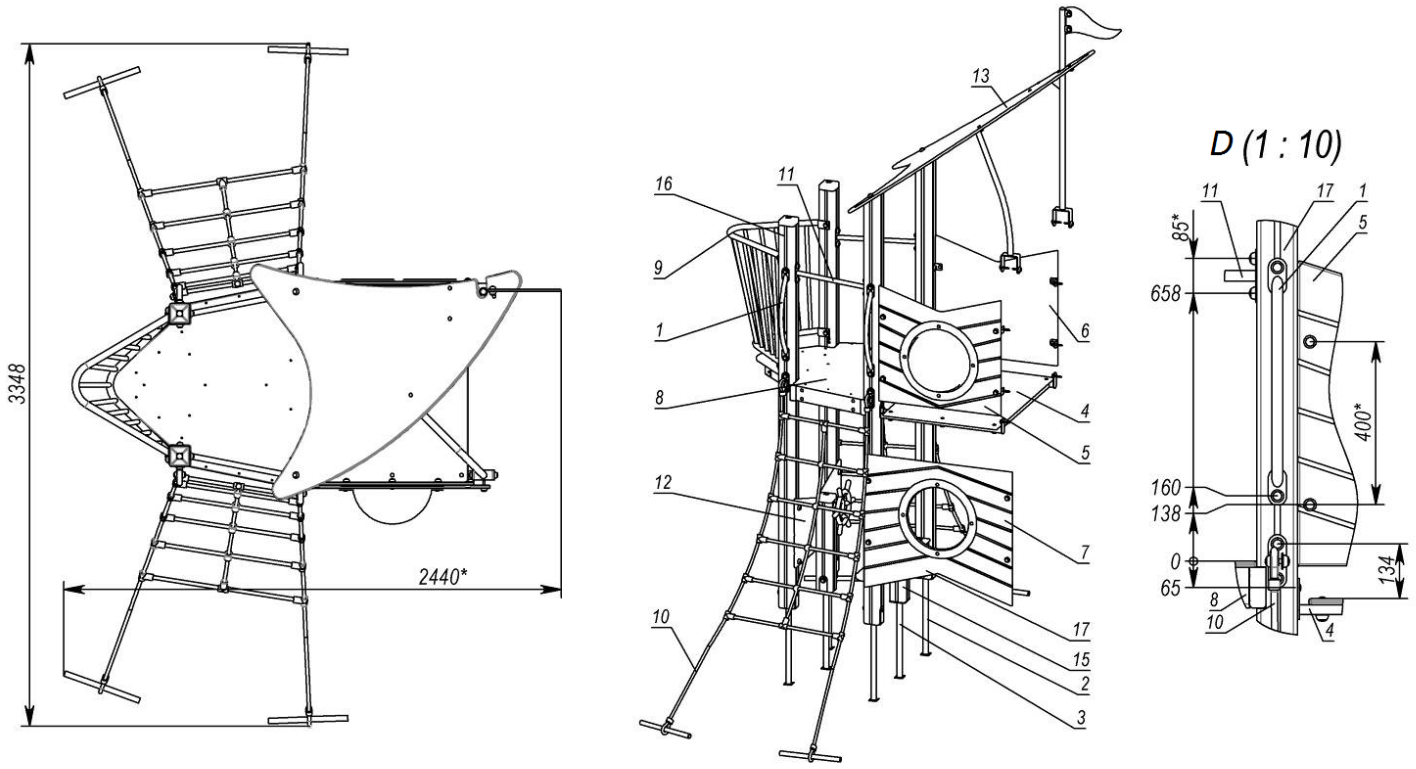

Pos.	Name	Weight, kg	Q-ty
1	Ladder handle	1	4
2	Beam support	2	4
3	Support	1	1
4	Straight small bridge	17	1
5	Bulwark with porthole assembly	6	1
6	Bulwark with fish assembly	6	1
7	Cover plate bulwark assembly	7	1
8	Site (Yacht)	18	1
9	Yacht bow frame	14	1
10	Rope ladder assembly	6	2
11	Brace rod 0.8m	1	2
12	Yacht steering wheel	9	1
13	Roof (yacht sail)	17	1
14	Bench	2	1
15	Table support	2	1
16	Beam	15	2
17	Beam	16	2
18	Big angle bar		2
19	Small angle bar		8
20	Cap		2
21	Cap		2
22	Cap M8		56
23	Cup M8		56
24	Bolt M8x30 GOST7802		10
25	Bolt M8x120 GOST7802		4
26	Bolt M8x130 GOST7802		2
27	Bolt M8x140 GOST7802		2
28	Nut M8 GOST5915		18
29	Washer 10 GOST11371		58
30	Washer 10 GOST6958		2
31	Washer 12 GOST6958		2
32	Screw 8x50 GOST11473		40
33	Screw 6x40 GOST1145		8

Picture 30

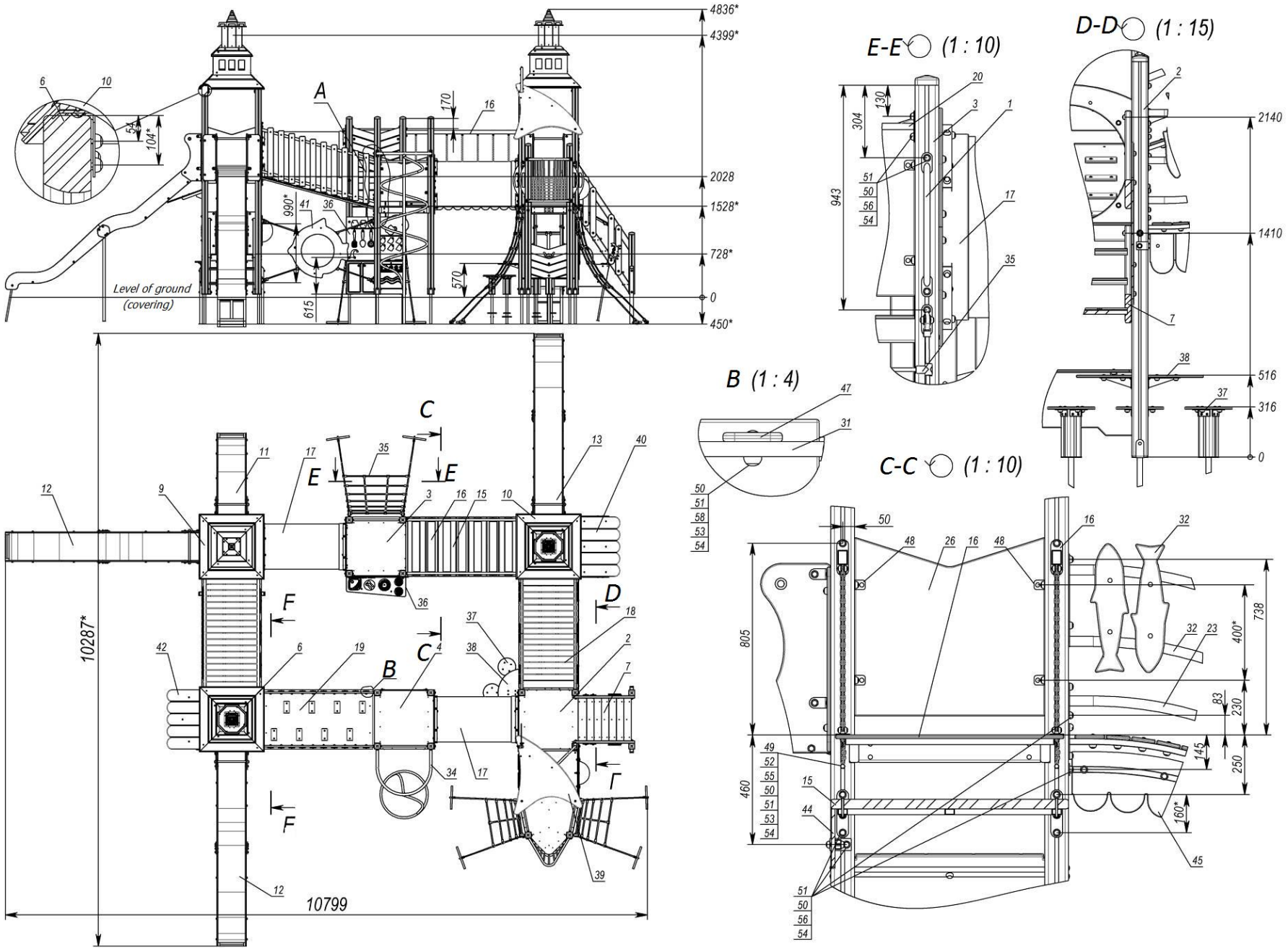

Picture 31 - Overall dimensions of the complex

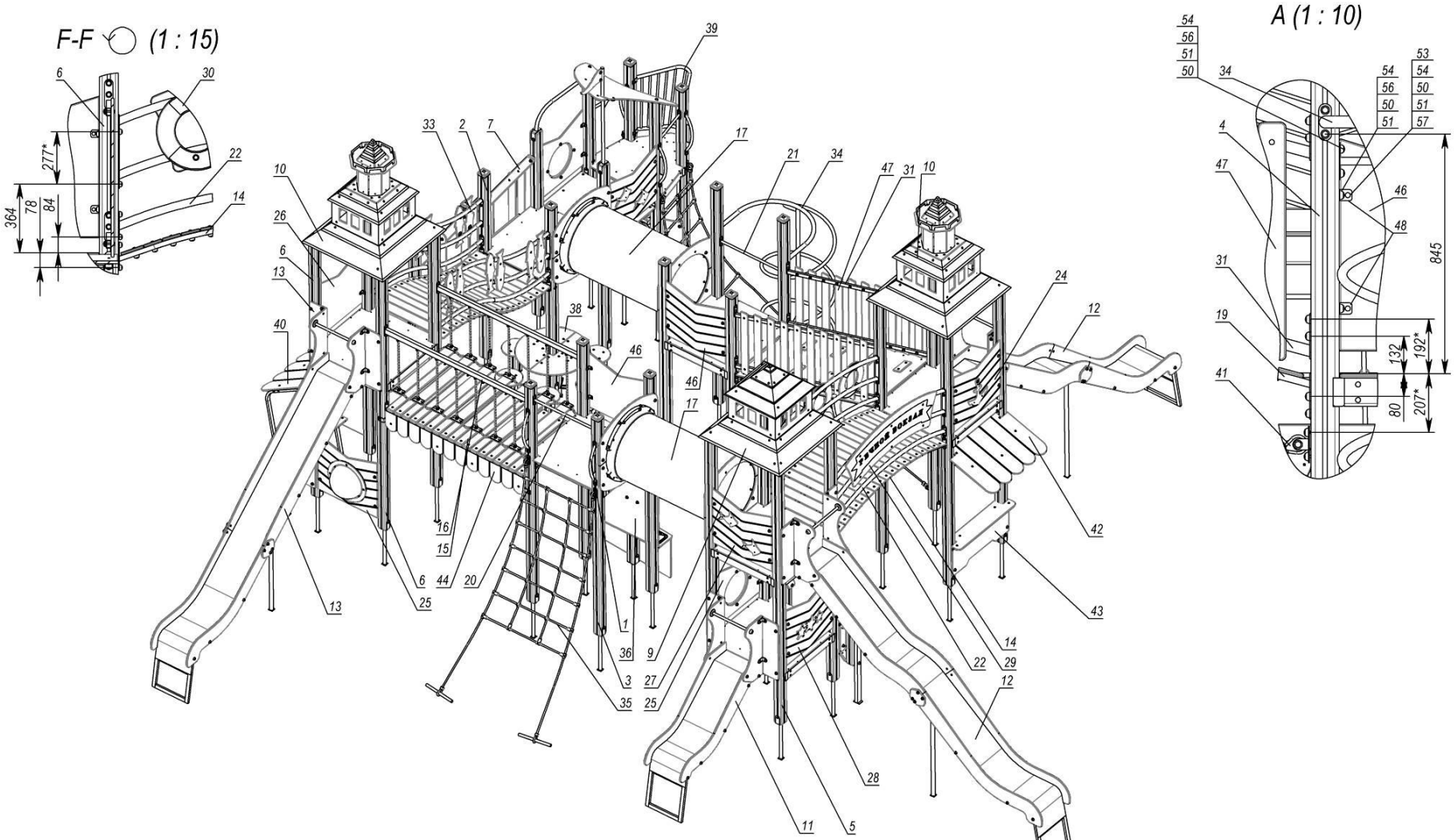

1. Drill holes for screws with diameter of 5 mm at the place of assembly.
2. Fastening of game panels to beams is carried out in accordance with type A.

Picture 32

Pos.	Name	Weight, kg	Q-ty
1	Ladder handle	1	2
2	Tower (1.5m) with hardware	83	1
3	Tower 2m 1x1	93	1
4	Tower 1.5m (Beam 2.5-2.95m)	89	1
5	Tower 0.7-2m (beam 3.5m)	107	1
6	Tower 2m 1x1 (without caps)	105	2
7	Stairs	64	1
8	Stairs with wooden handrails	31	1
9	Stepped roof assembly	33	1
10	Stepped roof assembly	44	2
11	Slide 700 assembly		1
12	Wavy slide (2m) assembly	88	2
13	Slide 2m assembly	84	1
14	Radial bridge (plywood TPS)	42	1
15	Straight bridge	59	1
16	Chain bridge (plywood TPS)	53	1
17	Tunnel crossing (Ukrhimplast)	52	2
18	Wavy bridge (plywood TPS)	40	1
19	Inclined bridge (plywood TPS)	39	1
20	Brace rod 0.8m	2	1
21	Brace rod 0.8m	2	1
22	Single radial railings	6	2
23	Single wavy railings (drop 500mm)	6	2
24	Bulwark with anchor	5	1
25	Bulwark with porthole assembly	6	2
26	Bulwark with seagulls assembly	6	1
27	Bulwark with fish assembly	6	1
28	Bulwark assembly	6	1
29	Arched railings (River station) assembly	18	1
30	Radial railings (lifebuoys) assembly	15	1

Pos.	Name	Weight, kg	Q-ty
31	Inclined railings frame	4	4
32	Wavy bridge railings right assembly	17	1
33	Wavy bridge railings left assembly	17	1
34	Spiral ladder 1200 assembly	32	1
35	Rope ladder assembly	8	1
36	Kitchen with dinnerware set	25	1
37	Bench assembly	6	6
38	Round table	9	1
39	Tower 1.5m (Yacht)	187	1
40	Cash desk (River station)	39	1
41	Climbing frame fish assembly	11	1
42	Canopy assembly	12	1
43	Café "River Station"	7	1
44	Canopy assembly	8	1
45	Wavy canopy assembly	9	1
46	Cover plate bulwark	5	2
47	Cover plate	1	20
48	Small angle		32
49	Cap S13		4
50	Cap M8		228
51	Cup M8		228
52	Bolt M8*120 DIN931		4
53	Nut M8 GOST5915		76
54	Washer 10 GOST11371		228
55	Washer 8 GOST11371		4
56	Screw 8x50 GOST11473		152
57	Bolt M8x30 GOST7802		32
58	Bolt M8x55 GOST7802		40

Picture 33